Planning Commission
Meeting Agenda

Monday, May 1, 2023 at 5:30 pm

City of Carpinteria, Council Chamber
5775 Carpinteria Avenue
Carpinteria, CA 93013

In-Person and Virtual Meeting

Attendance/Viewing Options:

- Attend the in-person meeting in City Council Chambers at City Hall (5775 Carpinteria Ave.)
- View the meeting live through the City's website (https://carpinteriaca.gov/city-hall/agendas-meetings) on your computer, tablet or smartphone.
- View the meeting on Government Access Television Channel 21 (broadcast live and rebroadcast on the Wednesday and the Saturday following the meeting at 8:00 p.m. and 5:00 p.m., respectively).

Public Comments:

- Provide a live public comment during the in-person meeting in City Council Chambers at City Hall (5775 Carpinteria Ave.). Please note the City has the discretion to limit the speaker's time for any meeting or agenda matter. Typically, the practice has been three minutes per speaker on each item.
- Submit a written comment (as either a general public comment or on a specific agenda item) to be distributed to Planning Commissioners by **12:00 P.M. on the day of the meeting** by either submitting your comment via (1) email to PublicComment@carpinteriaca.gov, (PLEASE NOTE NEW PUBLIC COMMENT EMAIL ADDRESS) or (2) the **eComment** link on the City's agenda website (https://carpinteriaca.gov/city-hall/agendas-meetings). Please reference the agenda item to which your comment pertains. Note that written comments will not be read into the record during the meeting.

Please note that the City will make every effort to make the meeting accessible; however, if one of the above attendance/viewing or public comment options is

unavailable due to technological issues, you are invited to take advantage of one of the other participation options outlined above (including attending and providing public comment in-person in the City Council Chambers). Additional options may be made available at the meeting.

As the situation with COVID-19 continues to evolve, the City will provide updates on any changes to this policy as soon as possible. The public is referred to the City's website at www.carpinteriaca.gov for the latest COVID-19 policies and information. The City of Carpinteria thanks you in advance for taking all precautions to prevent spreading the COVID-19 virus.

THE PLANNING COMMISSION RESERVES THE RIGHT TO CHANGE THE ORDER IN WHICH ITEMS ARE HEARD. APPLICANTS NOT IN ATTENDANCE WHEN THEIR ITEM IS CALLED MAY HAVE THEIR ITEM CONTINUED TO THE NEXT REGULAR MEETING.

Any information presented to the Planning Commission by the public on any agenda item and during Public Comment using electronic materials must be arranged with staff. Electronic materials must be provided to staff a minimum of two business days prior to the meeting.

Any written, printed or electronic material and/or exhibit presented at this meeting becomes the property of the City, and a copy must be provided to City staff.

Planning Commissioners
Jane L. Benefield, Chair
Glenn La Fevers, Vice-Chair
John Moyer
David Allen
Katherine Salant

CALL TO ORDER

ROLL CALL

PLEDGE OF ALLEGIANCE

INTRODUCTIONS, PRESENTATIONS, ANNOUNCEMENTS

PUBLIC COMMENT

This time on the agenda provides an opportunity for the public to address the Planning Commission on items within the jurisdiction of the Commission and not listed on other sections of the agenda. Please limit comments to no more than five minutes. Depending on the number of speakers wishing to make comments, the Chair may

further limit the time available to each speaker to control the amount of time spent on this part of the agenda. If you wish to speak on a CONSENT CALENDAR item, please do so during this part of the meeting.

Please be advised that California law does not allow the Planning Commission to discuss or take action on any issue presented by the public during this portion of the meeting. The Commission may ask a question for clarification, provide a brief response to public comment, refer the matter to staff for review and a later report or direct staff to place an item on a future agenda.

The City is not responsible for the content of statements made during the public comment period or the factual accuracy of any such statements.

CONSENT CALENDAR

NEW PUBLIC HEARING

If you have questions regarding any project listed below, please contact the Community Development Department at (805) 755-4410.

Review Procedure:

- Disclosure of Ex Parte Communications
- Staff Presentation
- Public Hearing
- Planning Commission Action

1) City Hall Storage Building
   Project # 22-2194-DP/CDP
   Address: 5775 Carpinteria Avenue
   Applicant: Matt Roberts, Director of Parks, Recreation, and Public Facilities
   Planner: Syndi Souter

   Hearing on the request of Matt Roberts, Director of Parks, Recreation, and Public Facilities, agent for the City of Carpinteria, to consider project 22-2194-DP/CDP (application filed October 12, 2022) for approval of a Development Plan and a Coastal Development Permit to construct a new 1,500 square-foot storage building with a maximum height of 15-feet on the City Hall campus under the provisions of Carpinteria Municipal Code (CMC) §14.34 – Community Facility District and §14.68 – Development Plan; and to approve an Exemption pursuant to §15303 and §15332 of the California Environmental Quality Act (CEQA) Guidelines. The application involves APN 001-170-018, addressed as 5775 Carpinteria Avenue

OTHER BUSINESS

MATTERS PRESENTED BY COMMISSIONERS

DIRECTOR'S REPORT

2) City calendar for the month of May, 2023
3) Planning Activity Report as of April 28, 2023
4) Building Permit Report as of April 28, 2023

ATTENDANCE OF PLANNING COMMISSIONERS FOR THE NEXT MEETING OF MONDAY, JUNE 5, 2023

ADJOURNMENT

NOTES

All actions of the Planning Commission may be appealed to the City Council. Appeals must be filed with the City Clerk within 10 calendar days of the Commission's action.

If you challenge any of the Planning Commission's decisions related to the agenda items above in court, you may be limited to raising only those issues you or someone else raised at the public hearing described in this notice or in written correspondence to the Planning Commission prior to the public hearing.

In compliance with the Americans with Disabilities Act, if you need assistance to participate in this meeting, please contact Lorena Esparza in the Community Development Department at (805) 755-4410 (Lorenae@carpinteriaca.gov) or the California Relay Service at (866) 735-2929. Notification 2 business days prior to the meeting will enable the City to make reasonable arrangements for accessibility to this meeting.

This agenda was posted on Thursday, April 27, 2023 in the Community Development Department, on the City Hall Public Notices Board, and on the Internet.

PLANNING COMMISSION STAFF REPORT

MEETING DATE: May 1, 2023

ITEM FOR CONSIDERATION

City Hall Storage Building

22-2194-DP/CDP

Request for a Development Plan and Coastal Development Permit to construct a new 1,500 square-foot storage building with a maximum height of 15-feet on the City Hall campus; and to approve an Exemption pursuant to §15303 and §15332 of the California Environmental Quality Act (CEQA) Guidelines.

Report prepared by: Syndi Souter, Associate Planner
Community Development Department

SIGNATURE

Reviewed by: Steve Goggia, Director
Community Development Department

SIGNATURE

Owner: City of Carpinteria

Applicant: Matt Roberts, Director of Parks, Recreation, and Public Facilities Department

Project Location: 5775 Carpinteria Avenue

APN: 001-170-018

Zoning: Community Facility (CF)

General Plan Designation: Public Facility (PF)

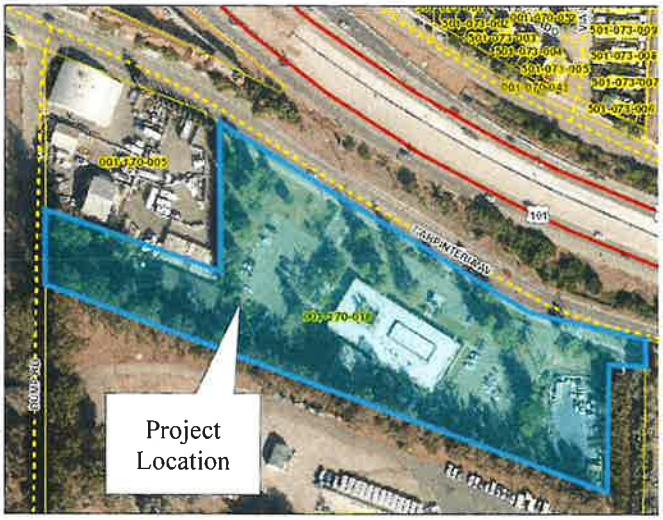

I. RECOMMENDATION

Adopt the attached Resolution No. PC-23-005, thereby approving Project 22-2194-DP/CDP to allow construction of a new 1,500 square-foot storage building with a maximum height of 15-feet on the City Hall campus; and to approve an Exemption pursuant to §15303 and §15332 of the California Environmental Quality Act (CEQA) Guidelines.

II. PROPOSED PROJECT DESCRIPTION

Development Plan

A Development Plan is requested to construct a new 1,500 square-foot storage building with a maximum height of 15-feet on the City Hall property. The project would include new landscaping and hardscape in the vicinity of the proposed structure.

Coastal Development Permit

A Coastal Development Permit is required to allow the proposed development as described above.

Proposed plans are attached as Exhibit 1, Attachment B.

III. BACKGROUND

Site Characteristics and Background

The project site is located on the west end of the City Hall campus in an open lawn area between the western parking lot and the existing Public Works building/yard. The project will encompass approximately 3,500 square feet of the 4.81-acre City Hall property. An existing lawn area and four trees (persimmon, pepper, and two small lemon) are presently located on the project site and would be removed/relocated, and a temporary office trailer would be relocated on the property to accommodate the project. An avocado tree located north of the project site would need to be trimmed back by approximately five feet on the south side to accommodate the proposed structure.

The project site is located in the Bluffs Area 0 Neighborhood, which is approximately 62 acres in size and is developed with the City Hall campus and the neighboring (former) Carpinteria oil and gas plant. Immediately adjacent to the subject property is the Tee Time driving range to the east, a storage yard and industrial uses to the west, the Chevron property to the south, and Carpinteria Avenue and U.S. Highway 101 to the north.

The site is zoned Community Facility (CF) District and has a Public Facility (PF) land use designation. The project site is subject to the Coastal Appeals (CA) overlay.

Architectural Review Board (ARB)

Preliminary ARB Review

The project was preliminarily reviewed by the ARB at their January 26, 2023 meeting. The Board was generally very positive and supportive of the project. Boardmember Blakemore had several comments on the landscaping plan related to water conservation and additional plantings to screen the project from Carpinteria Avenue. The other Boardmembers agreed with her comments. The Board voted 3-0 to recommend preliminary/final approval of the project to the Planning Commission with their comments included. A copy of the Minutes from the January 26, 2023 ARB Meeting is attached as Exhibit 2.

The proposed landscaping plan has been modified to show an expanded mulched area to conserve irrigation water and four Fuyu Persimmon trees on the north (Carpinteria Avenue) side of the storage building, per the comments from the ARB.

IV. ENVIRONMENTAL

This project is categorically exempt from environmental review pursuant to Sections 15303(e) [New Construction or Conversion of Small Structures] and 15332 [In-Fill Development Projects] of the Guidelines for the Implementation of the California Environmental Quality Act (CEQA). Class 3 Categorical Exemptions include the construction of accessory structures that are appurtenant to a primary use. Class 32 Categorical Exemptions include projects characterized as infill development that meet the following conditions: a) The project is consistent with the applicable General Plan designation and policies, and the applicable zoning designation and regulations; b) Project occurs within City limits on a project site of no more than five acres surrounded by urban uses; c) The project site has no value as habitat for endangered, rare or threatened species; d) Approval of the project would not result in any significant effects relating to traffic, noise, air quality or water quality; and e) The site can be adequately served by all required utilities and public services. As the project is consistent with these standards, the exemption is appropriate.

For more detail, see the attached Notice of Exemption included as Exhibit 3.

V. ANALYSIS

The discussion below provides an analysis of the project in terms of its compliance with the development standards of Chapter 14, Zoning, of the Carpinteria Municipal Code, and with the policies and objectives of the General Plan/Coastal Land Use Plan.

Carpinteria Municipal Code (CMC)

Title 14, Zoning

The project site is located in the CF zone district (CMC §14.34). Permitted uses in the CF zone district include governmental buildings and structures, such as the proposed storage building, subject to approval of a Development Plan and Coastal Development Permit. The following table identifies the project's conformance with the applicable Municipal Code requirements:

Standard	Requirement/Allowance	Proposal
Setbacks		
Front	45 feet from centerline of street or 15 feet from property line, whichever is greater.	235 feet from the centerline; 190 feet from the front property line
Side & Rear	Half the height of such portion of the building. (7.5 feet min.)	10 feet
Height	30 feet max.	15 feet

Building Coverage	40% max. (83,809 square feet)	11% (~22,770 square feet, including existing City Hall buildings)
Landscaping	20% min. (41,905square feet)	~34% (~71,833 square feet)
Distance between Buildings	½ the height of the tallest of the two buildings (10 feet)	10 feet
Parking	0 spaces*	0 spaces*

**See Parking Discussion below.*

Parking Discussion

The proposed storage building would be used solely for storage, and would not contain any new office or work space areas. As such, the structure is considered an accessory structure on the City Hall campus and would not generate demand for new parking spaces. Therefore, no new parking spaces are proposed to serve the storage building. It is noted that no spaces would be lost to accommodate the storage structure, and the existing 96 parking spaces would continue to be available for City Hall use.

Development Plan, Chapter 14.68

The purpose and intent of the Development Plan is to provide a comprehensive review of development that is subject to the requirements of this chapter in order to assess potential impacts of the proposed development on existing services and surrounding uses, and to ensure that new development is appropriately sited and designed. Prior to approving or approving with conditions a Development Plan, the Planning Commission shall determine that the following criteria have been met:

a. *The proposed development is in conformance with the provisions of the applicable zoning district, coastal plan and implementation programs, general plan, and specific plan(s) if required;*
b. *The proposed development is sited and designed to avoid risks to life and property due to geologic, flood, or fire hazards and that the proposed density of development is consistent with these objectives;*
c. *The proposed development will not cause substantial environmental damage or substantially and avoidably injure fish or wildlife or their habitat;*
d. *The proposed development will not conflict with any recorded easements acquired by the public at large for access through the property or use of the property or any easements granted to any public agency or required as a condition of approval;*
e. *The proposed development will not adversely affect necessary community services and values including but not limited to traffic circulation, sewage disposal, fire protection, water supply, and police protection;*
f. *The proposed development will not be detrimental to the peace, health, safety, comfort, convenience, property values, or general welfare of the neighborhood.*

An analysis of the project's consistency with these findings is included in Exhibit 1, Attachment A-Findings for Approval. Given the analysis provided therein, all of the required findings can be made to approve the Development Plan.

General Plan/Coastal Land Use Plan

The project site has a General Plan/Local Coastal Plan designation of Public Facility (PF) and is subject to the Coastal Appeals (CA) overlay. The project is in Design Subarea 6 (The Bluffs Area 0) of the Community Design Element.

Land Use Element

Objective LU-3: *Preserve the small beach town character of the built environment of Carpinteria, encouraging compatible revitalization and avoiding sprawl development at the City's edge.*

The proposed storage building would be located on the existing City Hall campus in an area that is presently underutilized lawn area. The storage building would be a new accessory structure on the City Hall property, nestled in with other existing structures.

Citywide Community Design Element Objectives & Policies

Objective CD-1: *The size, scale and form of buildings, and their placement on a parcel should be compatible with adjacent and nearby properties, and with the dominant neighborhood or district development pattern.*

Objective CD-2: *Architectural designs based on historic regional building types should be encouraged to preserve and enhance the unique character of the city.*

The proposed storage building would be utilitarian in nature, and the prefabricated metal building materials would visually identify the building's use. The structure would be located adjacent to the existing Public Works building, which is approximately 20-feet tall with vertical wooden siding and a brown roof. With the exception of the main City Hall building, other structures in the vicinity, both on the property and on surrounding adjacent properties, have exterior finishes of stucco, wood, metal, or CMU block. The proposed metal storage building would be architecturally consistent with other buildings in the vicinity.

Objective CD-11: *Existing public spaces should be maintained, and new public spaces should be incorporated into neighborhoods and districts as an important aspect of their design.*

Policy CD-11c. *All public spaces and facilities should reflect quality design.*

The design of the proposed storage building is very simple, with minimal details or architectural features. The proposed colors, comprised of a brown body and doors with a green roof, are classic colors for an outbuilding. The design of the storage building is suitable for the location and purpose.

Objective CD-13: *Ensure that lighting of new development is sensitive to the character and natural resources of the City and minimizes photo-pollution to the maximum extent feasible.*

Policy CD-13b: *Lighting shall be low intensity and located and designed so as to minimize direct view of light sources and diffusers and to minimize halo and spillover effects.*

The proposed exterior light fixtures have been reviewed by the ARB and would be the black "goose-neck" night sky friendly design that is popular throughout Carpinteria. The building would have a total of five exterior lights: three on the south side by the garage doors, one by the man-door on the east side, and one at the northwest corner for security. The proposed fixture is shown on Sheet E-1 of the plans.

Objective CD-14: *Protect and preserve natural resources by reducing energy consumption.*

Policy CD-14a: *To ensure the effective utilization of energy resources, design measures shall be incorporated into project design that allow for development projects to comply with and exceed the minimum energy requirements of the City's Uniform Codes.*

CD-14-Implementation Policy 7: *Building orientation shall be designed to maximize natural lighting and passive solar heating and cooling.*

CD-14-Implementation Policy 8: *Landscaping shall be designed to maximize the use of native drought-tolerant species and deciduous trees to shade buildings in summer and allow for passive solar heating in winter.*

The proposed storage building would need to comply with the 2022 California Building Codes, including Title 24 and other energy conservation requirements. The skylights, located along the east-west roof ridge, would allow sunlight into the storage building during the day when it would be used the most by City Staff, which could help to eliminate the need to turn on the interior lights. The landscaping consists of a palette of drought-tolerant plants that would conserve water, and the proposed Western Redbud and Fuyu Persimmon trees are deciduous.

Community Design Element Subarea 6 Objectives & Policies

Objective CDS6-2: *Ensure that development is controlled to avoid impacts to significant viewsheds, vistas, and view corridors.*

Policy CDS6-b: *Development on the Bluffs shall not obstruct existing view corridors of the ocean and bluff top edge. In addition, views of the ocean and mountains for users of the Carpinteria Bluffs Nature Park and coastal trail(s), for bluffs area property owners and visitors, and for passing motorists, shall be maintained.*

CDS6-Implementation Policy 57: *New structures shall be low intensity, and reflect the low-rise, small-town feel of the surrounding area. New structures shall be designed to blend into the site and the rest of the city.*

CDS6-Implementation Policy 58: *All structures, including ancillary structures, shall be appropriately placed so as to minimize their obtrusiveness, and to maintain existing view corridors. Existing views from Bailard Avenue, Carpinteria Avenue, and U.S. 101 to the ocean shall be preserved.*

CDS6-Implementation Policy 61: *Buildings should not turn their backs completely to the freeway, Carpinteria Avenue, or other adjacent street(s). Regardless of their orientation, buildings that are visible from the freeway, Carpinteria Avenue, the Bluffs Nature Park, Bluffs area trails, or bluff top*

view points, are to be designed to provide the same level of architectural detail on elevations visible from these areas as on other elevations of the building.

The proposed storage building would not impact public views of the ocean or bluffs due to its location in an area far back from the street and that is surrounded by tall trees and other vegetation. The structure would blend in to the rest of the Public Works portion of the City Hall campus. The rear of the structure would face Carpinteria Avenue, which would consist of a solid wall with new landscaping for screening. The purpose of the building is for storage, so additional windows or doors could interfere with the security of the structure. As such, staff feels that the storage building as proposed is adequate for the building's purpose and location, provided the proposed landscaping is installed and maintained to soften views of the building from elsewhere on the city hall campus and from Carpinteria Avenue.

Policy CDS6-e. *Exterior and interior lighting of development projects shall be low intensity and located and designed so as to minimize direct view of light sources and diffusers, and to minimize halo and spillover effects.*

As discussed previously, the proposed exterior light fixtures appear to be hooded, shielded, oriented downward and night-sky friendly.

Policy CDS6-f: *To ensure the efficient utilization of energy resources, design measures shall be incorporated into project design that allow for development projects to exceed the minimum energy requirements of the city's Uniform Codes:*

1. *Building orientation shall be designed to maximize natural lighting, passive solar heating, and cooling;*
2. *Landscaping shall be designed to maximize the use of native drought tolerant species and deciduous trees to shade buildings in summer and allow for passive solar heating in winter;*
3. *Energy efficient street lighting shall be used, with consideration of safety, visual impacts, and impacts to wildlife and sensitive habitat;*
4. *Design of parking facilities shall take into consideration the layout of entrances and exits so as to avoid concentrations of cars or excessive idling.*
5. *Alternatively fueled vehicles are to be used in construction and as fleet vehicles, if feasible and available.*

As discussed above, the proposed storage building would need to comply with the 2022 California Building Codes, including the Title 24 and other energy conservation requirements. The skylights would allow natural light into the storage building during the hours of primary use, which could help to eliminate the need to turn on the interior lights. The landscaping consists of a palette of drought-tolerant plants that would conserve water, and the proposed Western Redbud and Fuyu Persimmon trees are deciduous.

Safety Element

Objective S-1: *Minimize the potential risks and reduce the loss of life, property and the economic and social dislocations resulting from fault surface rupture in the planning area, from ground shaking due to an earthquake along a fault in the planning area or in the region, from seismically-induced liquefaction in the planning area, and from seismically-induced tsunamis.*

Policy S-1c. *Development in areas identified as having high seismically-induced liquefaction potential shall follow structural engineering foundation design parameters outlined in the Uniform Building Code or obtained through an independent structural engineering study.*

S-1-Implementation Policy 2: *Site specific geotechnical studies are required to more accurately determine the potential for liquefaction. These studies shall be performed prior to new construction and for the retrofit of critical facilities. The studies should include site-specific depth to groundwater and soil composition. Areas having liquefiable sediments should be identified, and structures should be designed to withstand liquefaction*

The Carpinteria Fault runs approximately 150 feet south of the project site, and the area is in a zone that has been mapped for a high liquefaction potential. As such, a soils report will be required to ensure that the building foundation will be designed to minimize seismic risks.

Policy S-5a: *All new structures must adhere to the Carpinteria-Summerland Fire Protection District Ordinance and the Santa Barbara County Fire Department Ordinances, where applicable.*

Policy S-5b: *All new structures, whether within or outside the urban limit zone, must adhere to the city Fire Sprinkler Ordinance.*

The Carpinteria-Summerland Fire Protection District has required the proposed storage building to have fire sprinklers installed as part of their conditions of approval for the project, which are included in Exhibit 1, Attachment C.

VI. DEVELOPMENT IMPACT FEES

Construction of the storage building on the City Hall property would not be subject to the payment of the City's Development Impact Fees.

VII. ACTION OPTIONS

1. Adopt Resolution No. PC-23-005, thereby approving Project 22-2194-DP/CDP to allow a new 1,500 square-foot storage building and associated improvements; accept the CEQA Notice of Exemption; and adopt the Findings for Approval in Exhibit 1, Attachment A and Conditions of Approval as proposed in Exhibit 1, Attachment C. (Staff's recommendation)

2. Direct the applicant to prepare project revisions and return to the next Commission meeting.

3. Conceptually deny the project as proposed. Direct staff to return with findings for denial to the Planning Commission's next meeting.

VIII. ATTACHMENTS

Exhibit 1 Resolution PC-23-005
- Attachment A – Findings for Approval
- Attachment B – Reduced Plans
- Attachment C – Recommended Conditions of Approval

Exhibit 2 January 26, 2023 ARB Meeting Minutes

Exhibit 3 CEQA Notice of Exemption

Exhibit 1
Resolution PC-23-005

City Hall Storage Building
20-2194-DP/CDP

May 1, 2023

RESOLUTION NO. PC-23-005

A RESOLUTION OF THE CITY OF CARPINTERIA PLANNING COMMISSION APPROVING DEVELOPMENT PLAN AND COASTAL DEVELOPMENT PERMIT NO. 22-2194-DP/CDP FOR A NEW STORAGE BUILDING LOCATED AT 5775 CARPINTERIA AVENUE (APN 001-170-018)

REQUESTED BY MATT ROBERTS, DIRECTOR OF THE CITY OF CARPINTERIA PARKS, RECREATION, AND PUBLIC FACILITIES DEPARTMENT.

WHEREAS, the Carpinteria Planning Commission has considered an application for a Development Plan and Coastal Development Permit filed by Matt Roberts, Director of the Parks, Recreation, and Public Facilities Department, on October 12, 2022 for a new storage building; and

WHEREAS, the application was subsequently deemed complete and accepted by the City as being consistent with the applicable submittal requirements on December 28, 2022; and

WHEREAS, the Carpinteria Architectural Review Board has considered the proposed project on January 26, 2023 and recommended preliminary/final approval; and

WHEREAS, the Planning Commission has conducted a hearing and received evidence regarding the application for the Development Plan and Coastal Development Permit; and

WHEREAS, the project is categorically exempt from the California Environmental Quality Act ("CEQA") pursuant to Sections 15303 (new construction or conversion of small structures) and 15332 (in-fill development projects) of the CEQA Guidelines as the project includes new construction of an accessory structure within an existing developed area, and

WHEREAS, the Planning Commission has reviewed the policies of the General Plan/Coastal Plan and the Zoning Code standards that are relevant to the project.

NOW THEREFORE, THE PLANNING COMMISSION HEREBY RESOLVES AS FOLLOWS:

1. The Development Plan and Coastal Development Permit are approved, making the Findings for Approval outlined in Attachment A.

2. The Development Plan and Coastal Development Permit for the project shown in Attachment B are approved subject to the project conditions of approval set forth in Attachment C.

PASSED, APPROVED AND ADOPTED this 1st day of May 2023 by the following called vote:

AYES: Commissioners:

NOES: Commissioner(s):

ABSENT: Commissioner(s):

ABSTAIN: Commissioner(s):

_____
Jane Benefield, Chair

ATTEST:

_____
Steve Goggia, Secretary

I hereby certify that the foregoing Resolution was duly and regularly introduced and adopted at a regular meeting of the Planning Commission of the City of Carpinteria held the 1st day of May 2023.

Exhibit 1
Attachment A: Findings for Approval

City Hall Storage Building
20-2194-DP/CDP

May 1, 2023

ATTACHMENT A: FINDINGS FOR APPROVAL

PLANNING COMMISSION HEARING
PROJECT 22-2194-DP/CDP
MAY 1, 2023

CITY HALL STORAGE BUILDING
REQUESTED BY MATT ROBERTS, DIRECTOR OF THE CITY OF CARPINTERIA PARKS, RECREATION, AND PUBLIC FACILITIES DEPARTMENT

FINDINGS PURSUANT TO GOVERNMENT CODE, LOCAL COASTAL PLAN, GENERAL PLAN, AND TITLE 14 OF THE CARPINTERIA MUNICIPAL CODE

1.0 Administrative Findings

The Planning Commission hereby incorporates by reference as though set forth in full all Community Development Department staff reports and attachments thereto presented to the Planning Commission and all comments made or received either orally or in writing at the public hearings on this project.

1.1 Procedures

Pursuant to the California Coastal Act, the Administrative Regulations of the California Coastal Commission and the City's Local Coastal Program, it has been found that the process for public review of the subject Development Plan and Local Coastal Development Permit has been properly conducted as follows:

a. An application for a Development Plan and Coastal Development Permit was submitted on October 12, 2022, and deemed complete and accepted by the City as being consistent with the applicable submittal requirements on December 28, 2023. Said application and all related materials have been available for public review at City offices since the date of submittal.

b. The application has been evaluated and found to conform to the applicable zone district and to be consistent with the City's Local Coastal Program Land Use Plan, the Interpretive Guidelines of the Coastal Commission and the California Coastal Act.

c. The project has been reviewed by the City's Architectural Review Board at a duly noticed public hearing which included, but is not limited to, mailed notice to all property owners within 300 feet of the subject property and residents within 100 feet of the property.

d. The project has been reviewed by the City's Planning Commission at a duly noticed public hearing which included, but is not limited to, mailed notice to all property owners within 300 feet of the subject property and residents within 100 feet of the property, and publication in the local newspaper, the Coastal View News.

1.2 California Environmental Quality Act Findings

The Planning Commission finds that the project is categorically exempt from environmental review pursuant to Sections 15303(e) [New Construction or Conversion of Small Structures] and 15332 [In-Fill Development Projects] of the Guidelines for the Implementation of the California Environmental Quality Act (CEQA). Class 3 Categorical Exemptions include the construction of accessory structures that are appurtenant to a primary use. Class 32 Categorical Exemptions include projects characterized as infill development that meet the following conditions: a) The project is consistent with the applicable General Plan designation and policies, and the applicable zoning designation and regulations; b) Project occurs within City limits on a project site of no more than five acres surrounded by urban uses; c) The project site has no value as habitat for endangered, rare or threatened species; d) Approval of the project would not result in any significant effects relating to traffic, noise, air quality or water quality; and e) The site can be adequately served by all required utilities and public services. As the project is consistent with these standards, the exemption is appropriate.

1.3 Development Plan Findings

Pursuant to Carpinteria Municipal Code §14.68.030(9), the Planning Commission may approve a Development Plan upon a determination that all of the following findings have been met:

1. *The proposed development is in conformance with the provisions of the applicable zoning district, Local Coastal Plan and implementation programs, and General Plan.*

   The property is located in the Community Facility zone district (CMC 14.34), is designated Public Facility (PF) in the General Plan/Coastal Land Use Plan, and is subject to the Coastal Appeals (CA) overlay. Governmental buildings, such as the City Hall, are allowed in the CF zone, and the proposed storage building would be allowed under, "uses, buildings and structures incidental, accessory, and subordinate to permitted uses." The PF land use designation includes, "municipal uses," and the storage building would be an accessory structure for the storage of City Hall records. Therefore, this finding can be made. As discussed in the Planning Commission staff report dated May 1, 2023 and hereby incorporated by reference, the project has been found to be consistent with all applicable development standards of the CF District, and complies with all applicable objectives and policies of the City's General Plan/Coastal Land Use Plan.

2. *The proposed development is sited and designed to avoid risks to life and property due to geologic, flood, or fire hazards and that the proposed density of development is consistent with these objectives.*

   This finding can be made because the proposed storage building and associated landscaping comply with the required setbacks for the parcel, is located on a relatively flat area of the parcel within an existing developed area, and is not within a flood or fire hazard zone. The project is located in an area that could have seismically-induced impacts, such as liquefaction, in the event of a large earthquake; however, the project has been conditioned to require that the storage building be constructed pursuant to the recommendations of the project-specific geotechnical report. Additionally, the Carpinteria-Summerland Fire Protection District has included a requirement for the building to have fire sprinklers installed as part of their conditions of approval for the project.

3. *The proposed development will not cause substantial environmental damage or substantially and avoidably injure fish or wildlife or their habitat.*

   The project is located in a developed location of the City Hall campus, and is not near a creek, wetland, or other known sensitive habitat. Therefore, this finding can be made.

4. *The proposed development will not conflict with any recorded easements acquired by the public at large for access through the property or use of the property or any easements granted to any public agency or required as a condition of approval.*

   The proposed project will not conflict with any recorded easements on the property, so this finding can be made.

5. *The proposed development will not adversely affect necessary community services and values including but not limited to traffic circulation, sewage disposal, fire protection, water supply, and police protection.*

   The proposed storage building would not change the intensity of the existing use of the City Hall campus, nor would it negatively impact such services as sewage disposal, fire protection, water supply, or police protection. Thus, this finding can be made.

6. *The proposed development will not be detrimental to the peace, health, safety, comfort, convenience, property values, or general welfare of the neighborhood.*

   The proposed storage building will provide much-needed on-site storage for City Hall files and records. The project would be ancillary to the daily functions of City Hall and would not generate any additional noise or traffic. As such, the peace, health, safety, comfort, convenience, property values, and general welfare of the neighborhood will not be impacted and this finding can be made.

1.4 Coastal Development Permit Finding

Pursuant to the California Coastal Act, the Administrative Regulations of the California Coastal Commission and the City's Local Coastal Program, it has been found that the permit requested may be issued based on the following findings:

a. *The proposed development is in conformity with the City's certified Local Coastal Program.*

The project involves the construction of a storage building and installation of associated landscaping on the City Hall campus. As discussed in the Planning Commission staff report dated May 1, 2023 and hereby incorporated by reference, the project is consistent with the General Plan/Coastal Plan's applicable Land Use, Community Design, and Safety Elements' Objectives and Policies in that the project provides an accessory structure on land designated for public facilities in a manner that avoids impacts to coastal resources and that can be found to be in compliance with all applicable development standards and policies of the City's certified Local Coastal Program. Therefore, the proposed storage building is consistent with the City's certified Local Coastal Program as shown.

Exhibit 1
Attachment B: Reduced Plans

City Hall Storage Building
20-2194-DP/CDP

May 1, 2023

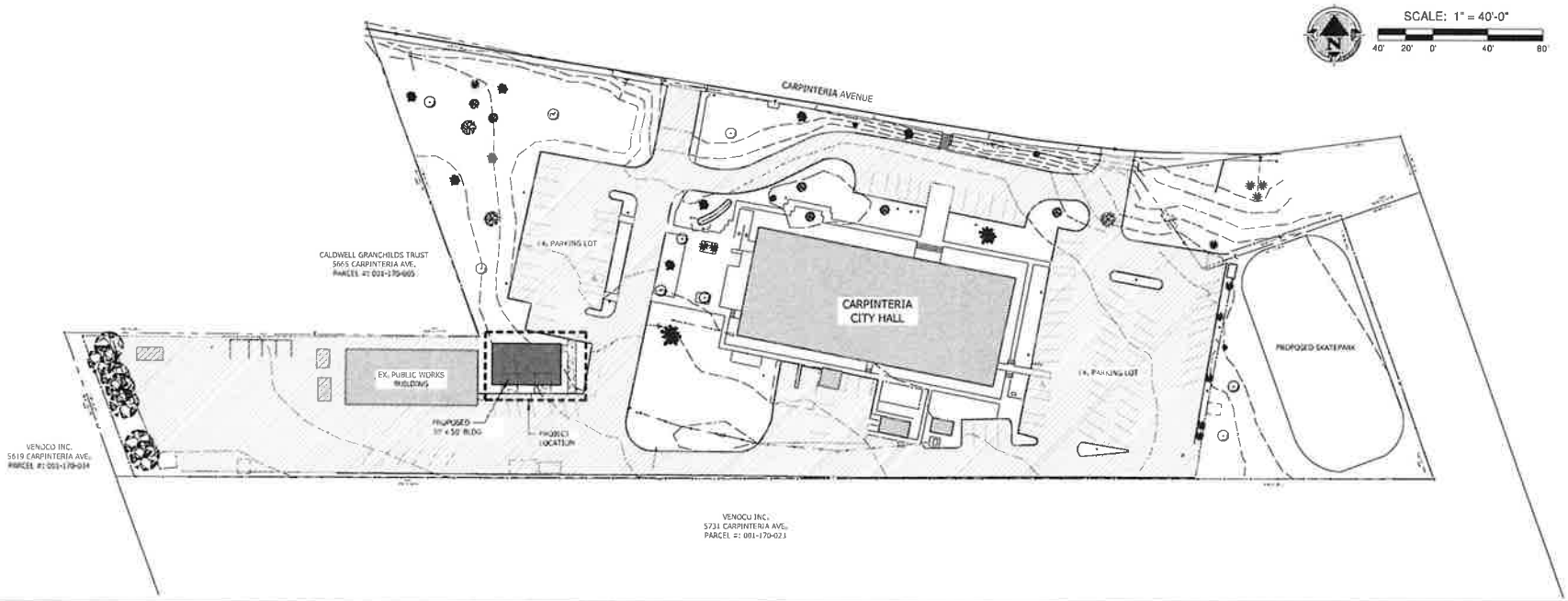

LEGEND

SYM	DESCRIPTION
	EXISTING CONTOUR
	EXISTING BUILDING
	PROPOSED BUILDING
	EXISTING ASPHALT PAVING LIMITS
	PROPOSED WALK
	EXISTING LIGHT POLE
	EXISTING POWER POLE
	BURIED POWER LINE
	POWER VAULT/BOX
	EXISTING DECIDUOUS TREE
	EXISTING PALM TREE

MEARS DESIGN GROUP
LANDSCAPE ARCHITECTURE & PLANNING
PO BOX 23338 | Portland, Oregon | 97281
Phone 503 801 4516 | Fax 503 924 4888

PRELIMINARY NOT FOR CONSTRUCTION

DETACHED BUILDING - CITY HALL

CITY OF CARPINTERIA

5775 CARPINTERIA AVENUE
CARPINTERIA, CALIFORNIA

REVISIONS

NO.	DATE	DESCRIPTION

SHEET NAME:
SITE PLAN

DRAWN BY: TM
CHECKED BY: MM
ISSUE DATE: 07-25-2022
JOB NO.: 2212

SHEET:
1
OF 2

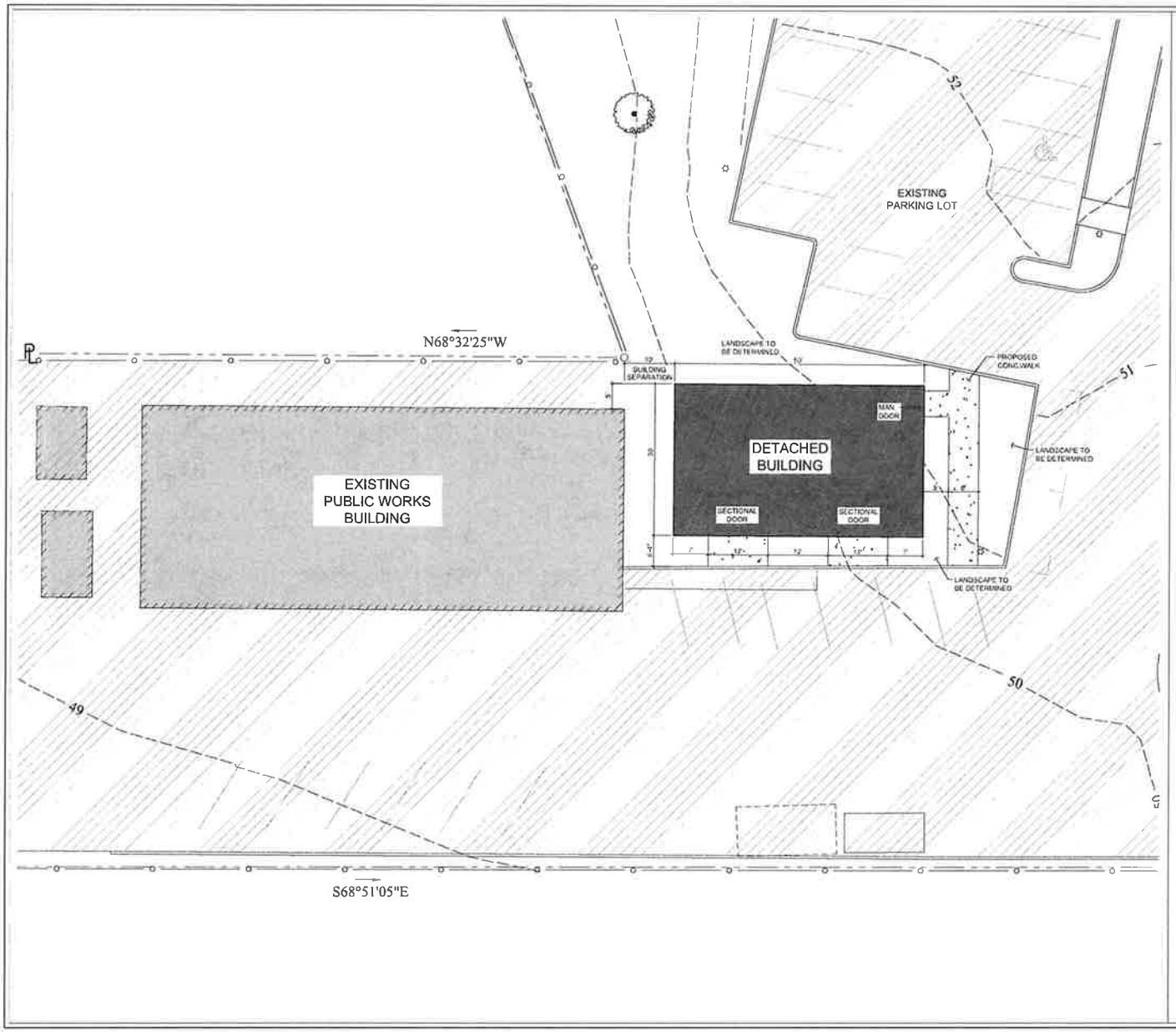

LAYOUT LEGEND

SYM	DESCRIPTION
	EXISTING CONTOUR
	EXISTING BUILDING
	PROPOSED BUILDING
	EXISTING ASPHALT PAVING LIMITS
	PROPOSED WALK
	EXISTING LIGHT POLE

LAYOUT NOTES

1. THE CONTRACTOR SHALL BE RESPONSIBLE FOR ALL SURVEY WORK
2. THE CONTRACTOR SHALL BE RESPONSIBLE FOR THE VERIFICATION OF THE LOCATIONS OF ALL UTILITIES IN THE FIELD. LOCATIONS SHOWN ON THE PLAN ARE APPROXIMATE AND FOR GENERAL INFORMATION ONLY.
3. ALL "LAYOUT" WORK SHALL BE APPROVED BY THE CITY OF CARPINTERIA PRIOR TO THE START OF ANY EXCAVATION
4. DIMENSIONS FOR WALKS, CURB WALLS AND CURBS ARE AT CENTER LINE OR ON THE SIDE SHOWN ON THE PLAN
5. THE CONTRACTOR SHALL BE RESPONSIBLE TO CONSTRUCT ALL CONCRETE WORK USING FORM LUMBER AND STAKES STRONG ENOUGH AND AT INTERVALS FREQUENT ENOUGH TO ASSURE ACCURATE ANGLES & SMOOTH CONTINUOUS RADII.
6. CONTRACTOR IS REQUIRED TO FENCE LIMITS OF CONSTRUCTION

SCALE: 1" = 10'-0"

10' 5' 0' 10' 20'

MEARS DESIGN GROUP
LANDSCAPE ARCHITECTURE & PLANNING
PO Box 23338 | Portland, Oregon | 97281
Phone 503 801 4616 | Fax 503 924 4688

PRELIMINARY NOT FOR CONSTRUCTION

DETACHED BUILDING - CITY HALL

CITY OF CARPINTERIA

5775 CARPINTERIA AVENUE
CARPINTERIA, CALIFORNIA

REVISIONS

REV	DATE	DESCRIPTION

SHEET NAME
LAYOUT PLAN

DRAWN BY: TM
CHECKED BY: TM
ISSUE DATE: 07.24.2012
JOB NO.: 2113

SHEET
2
OF 2

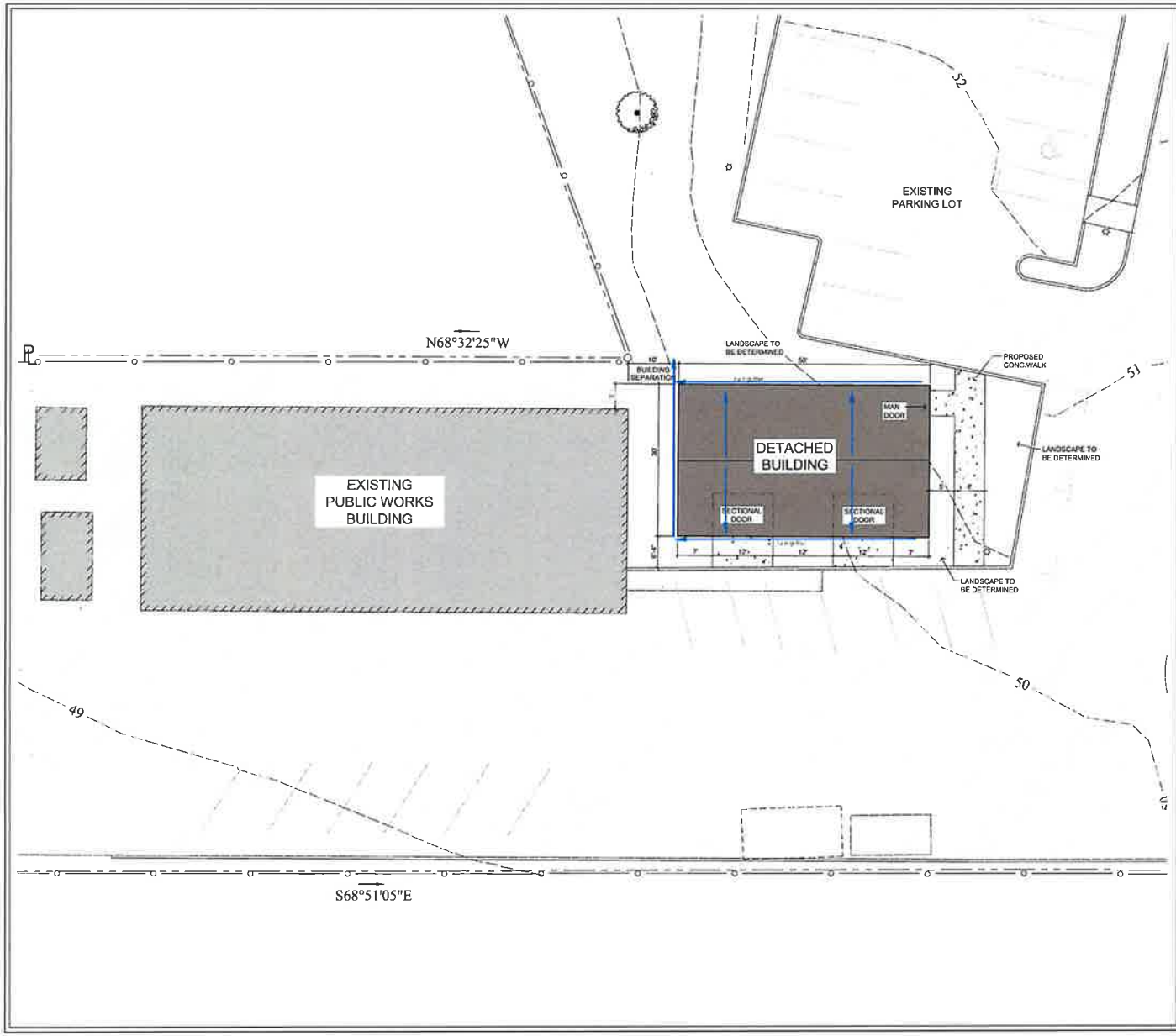

LAYOUT LEGEND

SYM	DESCRIPTION
	EXISTING CONTOUR
	EXISTING BUILDING
	PROPOSED BUILDING
	EXISTING ASPHALT PAVING LIMITS
	PROPOSED WALK
	EXISTING LIGHT POLE

LAYOUT NOTES

1. THE CONTRACTOR SHALL BE RESPONSIBLE FOR ALL SURVEY WORK
2. THE CONTRACTOR SHALL BE RESPONSIBLE FOR THE VERIFICATION OF THE LOCATIONS OF ALL UTILITIES IN THE FIELD. LOCATIONS SHOWN ON THE PLAN ARE APPROXIMATE AND FOR GENERAL INFORMATION ONLY.
3. ALL "LAYOUT" WORK SHALL BE APPROVED BY THE CITY OF CARPINTERIA PRIOR TO THE START OF ANY EXCAVATION
4. DIMENSIONS FOR WALKS, CURB WALLS AND CURBS ARE AT CENTER LINE OR ON THE SIDE SHOWN ON THE PLAN
5. THE CONTRACTOR SHALL BE RESPONSIBLE TO CONSTRUCT ALL CONCRETE WORK USING FORM LUMBER AND STAKES STRONG ENOUGH AND AT INTERVALS FREQUENT ENOUGH TO ASSURE ACCURATE ANGLES & SMOOTH CONTINUOUS RADII
6. CONTRACTOR IS REQUIRED TO FENCE LIMITS OF CONSTRUCTION

Rain water flow

SCALE: 1" = 10'-0"

10' 5' 0' 10' 20'

MEARS DESIGN GROUP
LANDSCAPE ARCHITECTURE & PLANNING
PO Box 23338 | Portland, Oregon | 97281
Phone: 503.501.4510 | Fax: 503.924.4088

PRELIMINARY NOT FOR CONSTRUCTION

DETACHED BUILDING - CITY HALL

CITY OF CARPINTERIA

5775 CARPINTERIA AVENUE
CARPINTERIA, CALIFORNIA

REVISIONS

REV	DATE	DESCRIPTION

SHEET NAME: LAYOUT PLAN

DRAWN BY: TJ
CHECKED BY: TJ
ISSUE DATE: 01/22/2021
JOB NO: 2212

SHEET 2 OF 2

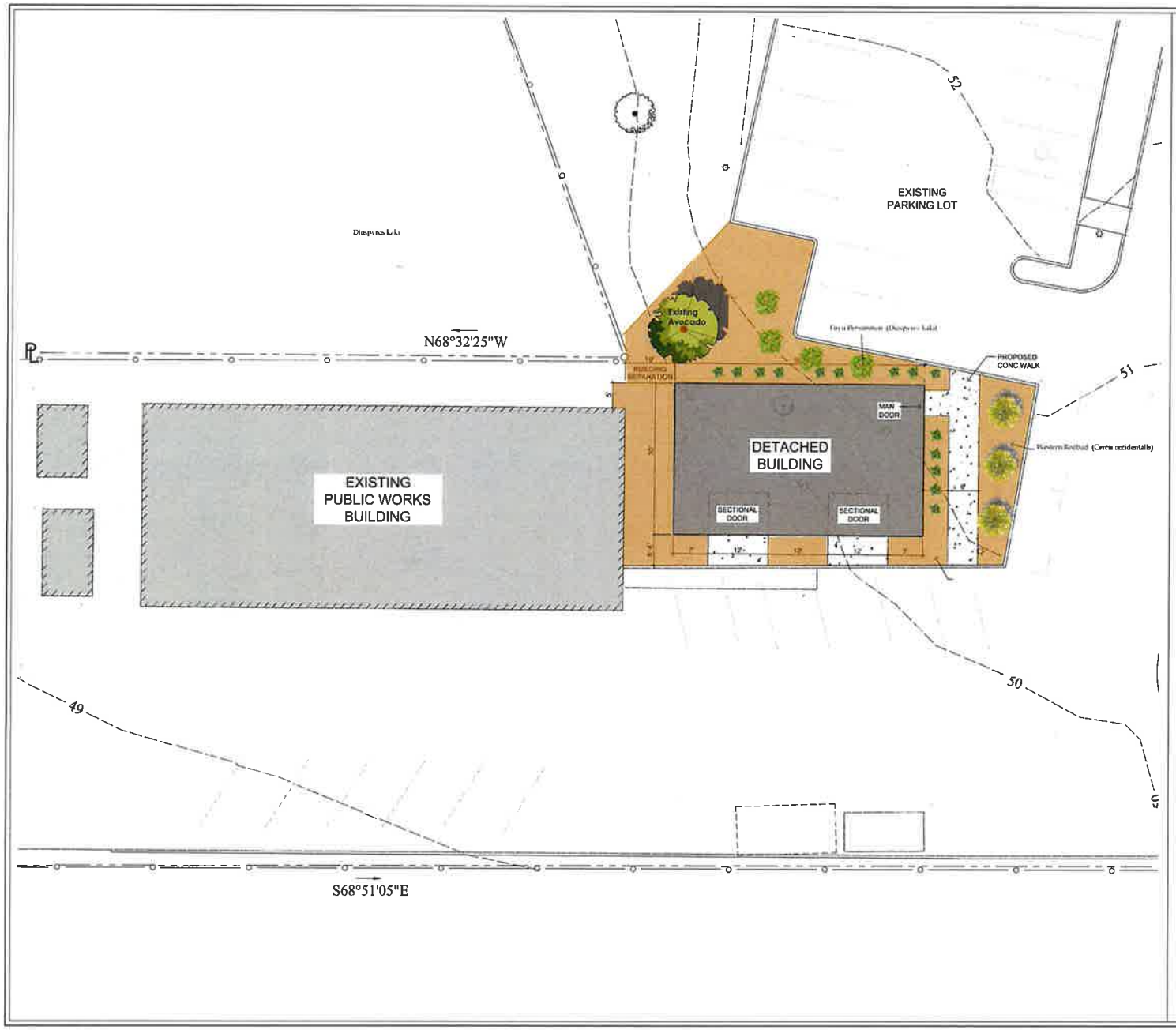

SYM	DESCRIPTION
	EXISTING CONTOUR
	Wood Mulch "chipper run"
	Western Red Bud (Cercis occidentalis
	PROPOSED WALK
	Hummingbird Sage (Salvia spathacea)
	Fuyu Persimmon (Diospyros kaki)


Fuyu Persimmon


Hummingbird Sage

LAYOUT NOTES

Irrigation by pressure regulated microspinkler

See planting plan details for irrigation specifications

Plants to be soured from local nurseries

SCALE: 1" = 10'-0"

10' 5' 0' 10' 20'

DETACHED BUILDING - CITY HALL

CITY OF CARPINTERIA

5775 CARPINTERIA AVENUE
CARPINTERIA, CALIFORNIA

REVISIONS

REV	DATE	DESCRIPTION

SHEET NAME
LANDSCAPE

DRAWN BY: TM
CHECKED BY: TM
ISSUE DATE: 07/13/2012
JOB NO.: 2013

SHEET
2
OF 2

PWS

Protective Weather Structures Inc.

Beautiful Steel Buildings

5290 Orcutt Road San Luis Obispo, CA 93401

Phone (805) 547-8797 Fax (805) 549-8469

Toll Free (888) 547-8797

PWSsteelbuildings.com

License B-850705

CONCRETE

1. CODE: ALL CONCRETE WORK SHALL CONFORM WITH THE 2018 "AMERICAN CONCRETE INSTITUTE (ACI) 318" & THE LATEST EDITIONS OF THE "ACI MANUALS OF CONCRETE PRACTICE," UNO
2. CONCRETE:
   - MINIMUM COMPRESSIVE STRENGTH: 2,500 PSI WITHIN 28 DAYS (UNLESS 2500 PSI)
   - MINIMUM CEMENT CONTENT: 5.5 SACKS (94 LB) PER YARD
   - MAXIMUM CEMENT RATIO: 0.58 WAL AND LOWER WATER ADDED AT THE SITE
   - MINIMUM WATER CONTENT: 38 GALLONS PER YARD
   - MINIMUM SLUMP: 4" ±1/2
   - MINIMUM AGGREGATE SIZE: 1"
   - FIBER (SAND) NOT TO EXCEED 1/2 OF THE TOTAL AGGREGATE. A 10/50 MIX MAY BE USED WITH 25% OF THE TOTAL AGGREGATE BEING 3/8" PEA GRAVEL WITH FINES NOT TO EXCEED 10% OF THE TOTAL AGGREGATE
   - ADMIXTURES AS DESIRED BY THE CONTRACTOR WITH THE MANUFACTURER'S MANUAL, OR THE STRUCTURAL ENGINEER
   - SPECIAL FINISHES ON & SEE ARCHITECT
3. REINFORCING:
   - #3 & SMALLER ASTM A615 GRD 40 OR GRD 60
   - #4 & LARGER ASTM A615 GRD 60
4. BAR SPACING (AT SPLICES) (BAR LAP):
   - #3 BARS 24"
   - #4 BARS 32"
   - #5 BARS 40"
   - #6 BARS 48"
   - STAGGER ALL ADJACENT LAP SPLICES 3'-0" MINIMUM
5. COLD FORM ALL REBAR BENDS. WELDING OF REINFORCING STEEL IS NOT ALLOWED
6. CONCRETE COVER (U.O.N.) REFERENCE (U.N.O.)
   - CONCRETE PLACED AGAINST GROUND: 3"
   - CONCRETE PLACED AGAINST FORMS, BUT IN CONTACT WITH GROUND AFTER FORM REMOVAL: 3"
   - ALL OTHERS: 1½"
7. EXTENDED PRODUCTS, ETC SHALL NOT BE PLACED IN FOUNDATIONS, SLABS, WALLS, ETC UNLESS SPECIFICALLY DETAILED ON THE S.D. DRAWINGS. FINES SHALL NOTIFY ARC & ENGINEER IMMEDIATELY IF SUCH FAILURES ARE ACCEPTED TO RECONSIDER ACTUAL SOIL CONDITIONS OR WORK SHOWN ON DRAWINGS BY OTHERS. ISOLATE ALL MECHANICAL EQUIPMENT SUCH SOILS ON SITE OR AS USED FOR LANDSCAPING
8. ANY SITTING ANCHOR BOLTS IS NOT ALLOWED. ALL EMBEDDED ITEMS, INCLUDING FIELD-SEWN ANCHOR BOLTS & "BOLT" BOLT ANCHOR BOLTS, MUST BE SECURED TO AND PLACE BEFORE FOUNDATION "INSPECTION" BY THE "BUILDING OFFICIAL" OR "STRUCTURAL OBSERVATION VISIT" AE1
9. FORM & SLEEVES:
   - CONCRETE FOUNDATIONS ARE ON INDEPENDENT FORM, NO CONSTRUCTION JOINTS.
   - USE NEW PLACED CONCRETE, BLOCK OUT 1" OR 4" MINIMUM SUPPLEMENT OR ALLOW 1/2" A FILLING.
   - MECHANICAL SLEEVES ALL CONCRETE
   - FINISH FOR TILES OR ALL BOARD, CARPET, WALLS, ETC TO BE SMOOTH & FLAT FOR UNIFORM BEARING OF FINISHES.
   - FINISH ALL SLABS AS & APPROPRIATE TO RECEIVE FINISH & TO BE NON-SLIP AS SPECIFIED BY THE OWNER.
   - FOR EXPOSED CONCRETE, APPLY WITH THE OWNER THE CREATION & LEVEL OF SCUM LINES, TEST SLABS, STAINING, COLOR SURFACE FINISH, ETC

STEEL

1. CODE: ALL WORK SHALL CONFORM TO THE LATEST EDITION OF THE "AMERICAN INSTITUTE OF STEEL CONSTRUCTION (AISC) MANUAL OF STEEL CONSTRUCTION" & APPLICABLE PROVISIONS OF THE AMERICAN BUILDING SOCIETY (ABS) UNO
2. MATERIALS
   - "STANDARD STRUCTURAL" FASTENING ½" & UNDERLA (HSS) ASTM A500 B/C - DUAL SPEC - f_y = 50 KSI
   - HOLLOW CIRCULAR "MECHANICAL" TUBING (CTUBE) & SHAPES (HSS) ASTM A500 B - F_y = 50 KSI
   - PLATE STEEL (P) ASTM A36 / ASTM A572 - DUAL SPEC - f_y = 50 KSI
   - 1½" HAT PLANKS/SHEETS MIN. 1050 ASTM A653 SS - f_y = 50 KSI
   - 1½" & 1½" & PANEL SHEETING MIN 1050 - ASTM A570 A200 - f_y = 55 KSI
   - ALL OTHER MISCELLANEOUS METALS ASTM A36 f_y = 36 KSI, UNO
3. WELDING
   - WELDS ARE STEEL (E70XX) & FINISHED, LARGER & DEEP & ON SCALE
   - STRUCTURAL STEEL (RED PRIME). STEEL WITH MISSING ELECTRODES, CLEAN SURFACES OF 70 to 80 of 2"
   - ALL TRUE MATERIAL SHALL CONFORM TO STANDARDS AND SPECIFICATIONS
   - BOLT, SHOP WELD ALL JOINTS ALL TRUE WELDS & MINIMUM 1/4 FILLET OR FILLET WELDS. FOR THE STRUCTURE OF THICK CONNECTIONS
4. BOLTING
   - ASTM A307 GRD A (NO OPTION) OR ASTM A36
   - ONLY OR PRIMARY ALL BOLT HOLES 1/16" OVER, EXCEPT OF HOLES IS NOT ALLOWED
5. STEEL FINISH
   - ALL LIGHT GAGE STEEL FRAMING SHALL BE GALVANIZED. TOUCH-UP DAMAGED AREAS & WELDS. GALVANIZING SHALL COMPLY WITH ALL APPLICABLE ENVIRONMENTAL REGULATIONS
   - THOROUGHLY CLEAN ALL STEEL ELEMENTS THAT ARE NEITHER EMBEDDED IN CONCRETE NOR GALVANIZED & APPLY ONE COAT OF RUST INHIBITING SHOP PRIMER. TOUCH UP DAMAGED AREAS. PRIMER SHALL COMPLY WITH ALL APPLICABLE ENVIRONMENTAL REGULATIONS
6. ALL FRAMING SHALL BE LEVEL, PLUMB, TRUE TO LINE, ACCURATE, SQUARE, ETC
7. SPECIAL INSPECTION
   - ALL SHOP & FIELD WELDING SHALL BE DONE BY PROPERLY LICENSED WELDERS & UNDER THE APPROPRIATE SUPERVISION OF A PROPERLY CERTIFIED SPECIAL INSPECTOR
   - ALL FIELD WELDING REQUIRES SPECIAL INSPECTION

DESIGN LOADS

BUILDING CODE	2019 CALIFORNIA BUILDING CODE RISK CATEGORY II	WIND LOADS	92 MPH (LRFD) 71 MPH (ASD) EXPOSURE D - INTERMITTENT TO OCEAN PARTIALLY ENCLOSED BUILDING
PROJECT LOCATION	LATITUDE +34.89° NORTH LONGITUDE -119.51° WEST	SEISMIC LOADS	S_{DS} = 1.839 S_{D1} = NA I = 1.0 R = 4.0 (DUAL CASE SIGN 1 BRACING) ρ = 1.3
SOIL BEARING	D 0 - 1 0 - 1/2"	1,500 PSF 1,500 PSF 2,500 PSF	SEISMIC DESIGN CATEGORY - D SOIL SITE CLASS - D
ROOF LOADS	LIVE DEAD CONSTRUCTION	20.0 PSF 3.0 PSF 20 PSF (500 @ 1000)	OTHER LOADS: SNOW N/A RAIN N/A FLOOD N/A

FOUNDATIONS & SOILS

1. SOILS REPORT: NO SOILS REPORT HAS BEEN PROVIDED. FOUNDATION DESIGN PARAMETERS ARE BASED UPON UNIFORM SOIL CONDITIONS WHICH CAN SUPPORT THE ASSUMED LOADS. ANY VARIANCE FROM CONDITIONS AS MAY BE DISCOVERED (SOFT SPOTS, PUMPING, SURFACE WATER, MOISTURE, ETC EXPANSION INDEX, ETC) SHALL BE REPORTED TO ARC IMMEDIATELY. WORK IN THE AFFECTED AREA SHALL CEASE UNTIL SUCH CONFLICT IS RESOLVED. ASSUMED SOIL CONDITIONS:
   - TRIAL PITS CURRENT EXPOSED NATIVE SOILS
   - 1124 EXPANSION INDEX (LOW CLAY CONTENT)
   - NO SIGNIFICANT ORGANIC MATERIAL
   - DRY, NO STANDING WATER

   ** IF ACTUAL SOIL CONDITIONS ARE UNFAVORABLE, A SOILS REPORT MAY BE REQUIRED
2. MINIMUM EARTHWORK REQUIREMENTS
   - EXCAVATE SOILS SHALL NOT EXCEED 3H:1V w/o APPROVAL OF A SOILS ENGINEER SLOPE. ALL SOIL TO GRADE MAY FROM THE BUILDING MAY BE USED PRIOR TO LOAD ON THE SOIL PLAN
   - CLEAR & GRUB ALL ORGANIC MATERIAL, WEEDS, ROOTS, STUMPS, ETC FROM THE BUILDING AND & UNDER ALL AREAS TO RECEIVE FILL SOIL FROM CLEARING & GRUBBING OPERATIONS. DISCARD SUCH SOILS ON SITE OR AS USED FOR LANDSCAPING
   - SURFACE SOILS TO RECEIVE STRUCTURAL FILL SCARIFY MIN 12" DEEP, MOISTURE CONDITION & RE-COMPACT. WHERE SOILS (MAY BE) SUBJECT TO RECEIVE FILL SOIL SUCH THAT THE EXPOSED SURFACE IS ROUGHLY FLAT (ON THE A WHICH COUNTER-SLOPE INTO THE FILL) & BONDED AS REQUIRED. BENCHES SHALL NOT EXCEED 12" IN WIDTH
   - SOILS FROM CUT AREAS (& FILLING SPOILS) SHALL BE MOVED TO THE FILL AREAS, PROPERLY MOISTURE CONDITIONED & THOROUGHLY COMPACTED (MIN 90%) WITH HEAVY EQUIPMENT (MAX 10" FILL SOILS IN LIFTS NOT TO EXCEED 8")
   - AS A MINIMUM WHERE NO FILL SOIL EXISTS, EXTENDED FILL FROM ALL SOILS UNDERLYING INTERIOR & EXTERIOR SLABS
   - IMPORTED GRADING, WITH SLABS SHALL BE PROPERLY MOISTURE & THOROUGHLY COMPACTED (MIN 90%) BY MECHANICAL MEANS (VIBRATORY PLATE, WHACKER)
   - ALL EROSION & DUST CONTROL SHALL BE ADDRESSED BY THE CONTRACTOR
3. EXCAVATIONS
   - DO WITH FOOTINGS & BUILDING EXCAVATIONS AS REQUIRED TO MAINTAIN DRY WORKING CONDITIONS
   - ALL FOOTINGS SHALL BE CLEAN & FREE OF DEBRIS & LOOSE MATERIAL. ALL SOIL PLACING CONCRETE. ANY LOOSE SOIL IN FOOTINGS SHALL BE REMOVED
   - EXCAVATIONS SHALL BE REGULAR & SQUARE. THE SIDES OF THE EXCAVATIONS SHALL BE SUPPORTED DURING WORK & COMPACT PLACEMENT SUCH THAT SOIL WILL NOT SLOUGH OFF INTO THE FOOTING EXCAVATIONS
4. MINIMUM FOOTING REQUIREMENTS
   - 24" MIN SHALL (REFER 2'-0" AVG MIN), UNDISTURBED SOIL (REFER ANY FILL SOILS) AS REQUIRED FROM LOADS) ALTERNATIVE CASE
   - THE DEPTH MAY BE REDUCED TO A MINIMUM OF 1'-6" FOR MAIN SOILS, ESTIMATED ON THE EXPANSION INDEX (E) PROVIDED SUCH SCHEDULE ON THE PLAN
   - ALL FOOTINGS SHALL BEAR ON A MINIMUM 1000 PSF ON SOIL OR A LANDFILL COMPACTION. IF ANY NEW FOOTINGS BEAR ON A COMPACTED COMPLY OF OTHER SAMPLE, PROVIDE MATERIAL, THEN ALL FOOTING LOCATION DATA SHALL BE DESIGNED TO BEAR ON SAMPLE MATERIAL
   - EXCEPTIONS ONLY FOUNDATIONS MAY BE BUILT UP USING MIN (3) SACK SAND SLURRY
   - MIN 12" 12"
5. ALL MATERIAL SUCH AS ORGANIC MATERIAL & STRUCTURE PROPERLY SHALL BE REMOVED & COMPACTED BY MECHANICAL MEANS.

WEDGE ANCHORS

1. WEDGE ANCHORS
   - MIN 3/8" PER ICC ESR-1396
   - SIMPSON STRONG-TIE WEDGE ANCHOR PER ICC ESR 2427

2. INSTALLATION
   - INSTALL ALL WEDGE ANCHORS PER THE MANUFACTURER'S WRITTEN SPECIFICATIONS.
   - BEFORE DRILLING ANY HOLES, CONTRACTOR SHALL VERIFY THE LOCATION OF ALL REBAR, PRE/POST STRESSED TENDONS, OTHER EMBEDDED ITEMS, ETC. ALL NEW WEDGE ANCHORS SHALL CLEAR ALL SUCH REBAR, PRE/POST STRESSED TENDONS, OTHER EMBEDDED ITEMS, ETC BY MINIMUM 1"

3. QUALITY CONTROL
   - SPECIAL INSPECTION IS REQUIRED
   - TESTING IS NOT REQUIRED

EPOXY ANCHORS

1. EPOXY
   - MIN 3/8" PER ICC ESR 2087
   - SIMPSON SET-XP PER ICC ESR 1772
   - NOZZLE MIXING ONLY
2. ROD
   - ANCHORS SIZE, HOLE SIZE & HOLES DEPTH AS NOTED ON THE DRAWINGS
   - REBAR STANDARD DEFORMED BAR, GRADE 36 & "CONCRETE NOTES"
3. THREADED ROD
   - ANCHORS SIZE, HOLES SIZE & HOLES DEPTH AS NOTED ON THE DRAWINGS
   - ASTM A36 FIXED BAR OR (MILD BOLT)
4. INSTALLATION
   - EPOXY INSTALLATION SHALL BE IN ACCORDANCE WITH MANUFACTURER INSTRUCTIONS. IF A MINIMUM ALL HOLES SHALL BE DRY & WELL CLEANED WITH A WIRE BRUSH & COMPRESSED AIR
   - DO NOT PLACE EPOXY IN HOLES UNTIL IMMEDIATELY PRIOR TO INSTALL ANCHORS. DO NOT ALLOW EPOXY TO PARTIALLY CURE BEFORE INSTALLING ANCHORS. DO NOT DISTURB ANCHORS UNTIL EPOXY HAS FULLY CURED
5. DRAWING CALLOUTS
   - SPECIAL INSPECTION & REQUIRED
   - TESTING IS NOT REQUIRED

SPECIAL INSPECTION

1. SPECIAL INSPECTION SHALL BE PERFORMED BY AN APPROPRIATELY CERTIFIED SPECIAL INSPECTOR (EARTH SYSTEMS PACIFIC, UNO). SPECIAL INSPECTION SHALL BE DIRECTLY PAID BY THE OWNER OR PAID BY FIRM & BACK CHARGED TO THE OWNER
2. THE SPECIAL INSPECTION PER THE 2019 CBC (EXAMPLE TO BE REQUIRED FOR THE FOLLOWING CONSTRUCTION DIVISIONS):

ITEM	TYPE	NOTES
EARTH WORK		
1 FOUNDATION AND SOIL PRIOR POUR	CONTINUOUS	BY SOILS ENGINEER - BY OTHER SPECIALISTS
2 SOIL BEARING	CONTINUOUS	BY SOILS ENGINEER
3 EXPORT MATERIAL / COMPACTION	CONTINUOUS	BY SOILS ENGINEER
POST INSTALLED ANCHORS		
1 WEDGE / MECHANICAL ANCHOR	CONTINUOUS	AS NOTED ON PLANS - BY OTHER SPECIALISTS OR EARTH SYSTEMS PACIFIC
2 EPOXY / ADHESIVE ANCHORS	CONTINUOUS	AS NOTED ON PLANS
STRUCTURAL STEEL		
1 STEEL MATERIAL	PERIODIC	BY AISC 360 - BY EARTH SYSTEMS PACIFIC
2 WELD MATERIAL	PERIODIC	BY AISC 360
3 WELDING INSPECTION	PERIODIC/CONT	BY AISC 360
4 JOINT DETAILS	PERIODIC	BY AISC 360
5 ALL FIELD WELDING	CONTINUOUS	NDT REQUIRED

3. STRUCTURAL OBSERVATION VISITS BY AEI IN NO WAY CONSTITUTE "INSPECTION" TO BE PERFORMED BY THE "BUILDING OFFICIAL" OR "SPECIAL INSPECTION" TO BE PERFORMED BY THE "SPECIAL INSPECTOR"
4. A FAIR/COMPLETE "SPECIAL INSPECTION REPORT" SHALL BE PREPARED BY THE "SPECIAL INSPECTOR" & DELIVERED TO THE "BUILDING OFFICIAL" "SPECIAL INSPECTION" TO BE PERFORMED BY THE "SPECIAL INSPECTOR"

GENERAL NOTES

1. BUILDING CODE
   - THIS SHALL BEAR ON THE JOB SITE A COPY OF THE 2019 CALIFORNIA BUILDING CODE (CBC), AS PROVIDED BY LOCAL BUILDING OFFICIAL & OTHER APPLICABLE CODES AS MAY BE REQUIRED
   - CONSTRUCTION SHALL CONFORM TO THE APPLICABLE SECTIONS OF THE CBC, THE 2019 OF THE CALIFORNIA CODE OF REGULATIONS, TO LOCAL ORDINANCES & TO THE CONSTRUCTION DRAWINGS.
   - WHERE THERE IS A CONFLICT BETWEEN REQUIREMENTS, THE MORE STRINGENT REQUIREMENT SHALL GOVERN
2. CODE COMPLIANCE
   - NOTIFY ALL EXISTING EXCAVATION PROCEDURE TO THE SITE BEFORE BEGINNING BEFORE STARTING WORK UNDERGROUND SHALL BE REPORTED BY FIRM IN WRITING TO ARC IMMEDIATELY. WORK IN THE AFFECTED AREA SHALL CEASE UNTIL SUCH CONFLICT IS RESOLVED
   - NOT STORE REPAIR SUCH MATERIALS ON THE PUBLIC RIGHT-OF-WAY. FIRM SHALL PROVIDE DUST & EROSION CONTROL DURING ALL PHASES OF THE PROJECT, NOT LIMITED TO WORKING HOURS
   - COMPLETE ALL WORK IN A COMPLETE & QUALITY MANNER. THE OWNER & ALL ON AND OTHER OWNERS OF THE SITE SHALL BE NOT LIABLE SHALL BE THE SUBJECT OF ACCEPTABLE WORKMANSHIP
3. ALL REPORTS TO BE PROVIDED TO FIRM, TO SCHEDULE & COORDINATE
   - ALL WORK, INCLUDING THAT OF SUBCONTRACTORS & VENDORS
   - "INSPECTIONS" BY THE "BUILDING OFFICIAL"
   - "SPECIAL INSPECTIONS" BY THE "SPECIAL INSPECTOR"
4. WORK & MATERIALS
   - FIELD DAMAGE REPAIRS TO THE VARIOUS SUBSYSTEMS. UNLESS NOTED OTHERWISE, THEY DO NOT INCLUDE THE BRINGS OF CONSTRUCTION.
   - FIRM SHALL PROVIDE ALL MEASURES NECESSARY TO PROTECT THE STRUCTURE, WORKERS, OTHER PERSONS, OTHER IMPROVEMENTS (ON THE PROPERTY AS THE SITE AND/OR OFF-SITE) & ON ADJACENT PROPERTY DURING CONSTRUCTION. SUCH MEASURES SHALL BE SOLELY THE RESPONSIBILITY OF FIRM THROUGHOUT THE DURATION OF THE PROJECT & SUCH RESPONSIBILITY SHALL NOT BE LIMITED TO WORKING HOURS. SUCH MEASURES SHALL INCLUDE, BUT SHALL NOT BE LIMITED TO, TEMPORARY BRACING, FORMS, SHORING, SUPPORT OF EXCAVATIONS, ETC
   - TEMPORARY BRACING OF THE EXISTING STRUCTURE & STRUTS TO RESIST ALL IMPOSED LOADS, INCLUDING WIND & SEISMIC LOADS SHALL BE PROVIDED BY FIRM FOR ALL BUILDING COMPONENTS.
   - FIRM SHALL ENGAGE A DULY CERTIFIED PERSONS TO DETERMINE WHERE & HOW TEMPORARY FOUNDATIONS MEASURES SHALL BE USED & TO INSPECT SAID ITEMS IN THE FIELD. AEI IS NOT RESPONSIBLE FOR ANY JOB SITE SAFETY, PRECAUTIONARY MEASURES, TEMPORARY SUPPORTS, ETC
   - CONSTRUCTION MATERIALS & EQUIPMENT SHALL BE SPREAD OUT & PLACED ON TRIALED FLOORS OR ROOFS. LOADS CAUSED BY SUCH WHICHALL & COMPACT SHALL NOT EXCEED THE DESIGN LIVE LOAD FOR EACH PARTICULAR LEVEL.
   - STRUCTURAL/SOIL OBSERVATION VISITS TO THE SITE BY ALL & OTHER MEMBERS OF THE DESIGN TEAM DO NOT INCLUDE INSPECTION/APPROVAL OF ANY OF THE ABOVE LISTED ITEMS
5. DRAWINGS
   - INCLUDING AEI NOTES APPLY ONLY TO THE STRUCTURAL PERFORMANCE OF THE BUILDING. ISSUES SUCH AS WALL FRAMING, ROOFING, SIDING, DRY DRAINAGE, MARGIN ATTACHMENTS, QUALITY OF FINISHES, WATERPROOF SPACED FRAMES, ETC SHALL BE ADDRESSED BY FIRM.
   - SHALL BE READ IN CONJUNCTION WITH ALL OTHER CONSTRUCTION DRAWINGS, INCLUDING ARCHITECTURAL, CIVIL, MECHANICAL, PLUMBING, ELECTRICAL, FIRE SAFETY, LANDSCAPE, DRAINAGE & IRRIGATION SPECIFICATIONS AS MAY EXIST
   - DETAILS SHOWN ON DRAWINGS ARE TYPICAL, SIMILAR OR SIMILAR CONDITIONS. SPECIFIC NOTES & DETAILS SHALL TAKE PRECEDENCE OVER GENERAL NOTES & DETAILS.
   - DIMENSIONS & CLEARANCE CONSTRUCTION DIFFERENCE FROM THAT SHOWN SHALL BE REPORTED BY FIRM IN WRITING TO AEI IMMEDIATELY. WORK IN THE AFFECTED AREA SHALL CEASE UNTIL SUCH CONFLICT IS RESOLVED
   - DIMENSIONS SHOWN SHALL TAKE PRECEDENCE OVER SCALE ON PLANS, SECTIONS & DETAILS. DIMENSIONS SHALL BE APPROVED BY FIRM IN WRITING TO AEI IMMEDIATELY. WORK IN THE AFFECTED AREA SHALL CEASE UNTIL SUCH CONFLICT IS RESOLVED
   - ALL NEWLY SHALL BE CONSIDERED NEW UNLESS EXPRESSLY NOTED AS EXISTING
6. OWNERSHIP CONSTRUCTION DOCUMENTS
   - ALL DRAWINGS, CALCULATIONS, REPORTS, ETC IN THE BOOKS & DESIGNS EXPRESSED THEREIN ARE SOLELY THE PROPERTY OF AEI. ANY REUSE OF SUCH MATERIALS IN WHOLE OR IN PART, OR UNLAWFUL ACCESS, OR VIOLATE WE RECEIVED EXPRESSED WRITTEN PERMISSION FROM AEI.
   - ANY ALL DRAWINGS, CALCULATIONS, REPORTS, ETC IS LIMITED TO THE PROJECT & SITE NOTED. SUCH MATERIALS ARE NOT ACCEPTABLE, REQUIRED OR IN WHOLE FOR ANY OTHER PROJECT OR SITE.
   - REPORT CONTACT WITH THESE DRAWINGS CONSTITUTES PERMISSION (VERBAL OR & ACCEPTANCE) OF THESE TERMS

DISCLAIMER

1. THESE DRAWINGS BY ARTISAN ENGINEERING, INC (REFERRED TO HEREIN AS AEI), SEALED/SIGNED BY CHARLES RICHARDS S.E. MAY ARE FOR STRUCTURAL PURPOSES ONLY. PROFESSIONAL WRITTEN SUBCONTRACTS, INC (REFERRED TO HEREIN AS FIRM) SHALL EXPLICITLY VERIFY MATERIAL ISSUES PLUS ARE NO LIMITED TO:
   - ALL ISSUES FROM PROPERTY LINES, HEIGHT LIMITS, ETC
   - THE ACTUAL SITE PROPERTY, TOPOGRAPHY, ETC
   - ANCHORING / DRAINAGE ACT ACCESS, TOPOGS, ETC
   - WATER PROOFING, WEATHERIZATION, SEALING, ETC
   - HAZARDOUS & QUALITY, SUBSTANDARD, FUNGAGE, ETC
   - GRADING, DRAINAGE, EXTERIOR/DRAINAGE, ETC
2. PRECISE INSPECTION OF ANY/ALL ASPECTS THAT ARE NOT BEEN ADDRESSED BY FIRM OR THE OWNER. ANY ISSUES THAT ARE NOT FULLY VERIFIED, SURVEYED, ETC INCLUDING/INCLUDED OF ANY/ALL UNDERGROUND FACILITIES SHALL BE ADDRESSED BY THE FIRM OR FIRM.
3. FIRM CONTACT WITH THE DRAWINGS CONSTITUTES FIRM FACT (VERBAL OR & ACCEPTANCE) OF THESE TERMS.

VICINITY MAP

SCOPE OF WORK

- NEW DECK TO THREE STORY ONE
- NEW NEW CONCRETE FOUNDATION (NEW SHEAR WALL)
- NO INTERIOR, PLUMBING, MECHANICAL, NO NEW WALLS OR ALTERATIONS OF ANY SUCH MODIFICATIONS ARE AT WORK & REPLACEMENT ITEMS

SHEET INDEX

APPLICABLE BUILDING CODES

ALL WORK SHALL CONFORM TO THE FOLLOWING CODES AS ADOPTED BY THE BUILDING OFFICIAL. WHEN CONFLICTS OCCUR, THE MORE STRINGENT REQUIREMENTS SHALL GOVERN.

- 2019 CALIFORNIA BUILDING CODE, VOLUME 1 & 2
- 2019 CALIFORNIA ELECTRIC CODE
- 2019 CALIFORNIA HVAC CODE
- 2019 CALIFORNIA GAS & PLUMBING CODE
- 2019 CALIFORNIA MECHANICAL CODE
- 2019 CALIFORNIA ENERGY CODE & ACCESSIBILITY STANDARDS
- 2019 CALIFORNIA FIRE CODE
- 2019 CALIFORNIA GREEN BUILDING CODE
- 2019 CALIFORNIA HEALTH & SAFETY CODE
- 2019 CALIFORNIA ELECTRICAL CODE
- ALL 16 CALIFORNIA CIVIL CODE ORDINANCE
- ALL 24 CALIFORNIA STATE ENERGY & ACCESSIBILITY STANDARDS

ABBREVIATIONS

AB	ANCHOR BOLT	FAB(RIC)	FABRICATE(D)	PAP	PAPER/PAPER
ABV	ABOVE	FDN	FOUNDATION	PLCP	PARTIAL JE PENETRATION
ADDL	ADDITIONAL	FRMG	FRAMING		
ALT	ALTERNATE	FTG	FOOTING	REINF	REINFORCING
				REQD	REQUIRED
BOS	BOTTOM OF	GRD	GRADE		
BOW	BOTTOM			SIM	SIMILAR
BM	BEAM	HDR	HEADER	SMS	SHEET METAL SCREW
BOL	BOLTING	HORIZ	HORIZONTAL	SPACG	SPACING
BTWN	BETWEEN	HT	HEIGHT	SQ	SQUARE
		HWSH	HOT WASHER HEAD	STGR	STAGGER
CLR	CLEAR			STL	STEEL
CTR	CENTER	INFO	INFORMATION	STRL	STRUCTURAL
CONC	CONCRETE				
CONST	CONSTRUCTION	LGH	LONG SIDE HORIZONTAL	TC	TOP OF
CONT	CONTINUOUS	LLV	LONG SIDE VERTICAL	TBRG	THROUGH
CONTR	CONTRACTOR			TRUSS	TRUSS TYPE
COORD	COORDINATE	MANUF	MANUFACTURER	TS	TUBE STEEL
		MAX	MAXIMUM	TYP	TYPICAL
DIA	DIAMETER	MIN	MINIMUM		
DIAG	DIAGONAL	MW	MANWAY	UNLO	UNLESS NOTED OTHERWISE
DWGS	DRAWINGS				
		OH	OVERHEAD	WPD	WOOD
EA	EACH	OPNG	OPENING		
EXTR	EXTENSION			W/	WITH
EXCV	EXCAVATE			W/O	WITHOUT
EXP	EXPANSION				

ARTISAN ENGINEERING INCORPORATED

875 Comet Blvd.
Morro Bay, CA 93442
805 574 6684

PROJECT

CARPINTERIA

5778 CARPINTERIA AVENUE
CARPINTERIA, CA

APN:

OWNER

CITY OF CARPINTERIA
5775 CARPINTERIA AVENUE
CARPINTERIA, CA

CONTRACTOR

P W S INC B-850705
5290 ORCUTT ROAD
SAN LUIS OBISPO, CA 93401

PHONE 805 547 8797

WWW.PWSSTEELBUILDINGS.COM

DRAWING TITLE

GENERAL STRUCTURAL NOTES

REVISIONS

1 PWS REVIEW	2021 11 2
2 SUBMITTAL FOR P.C.	2021 12 13

SUBMITTAL FOR PLAN CHECK

DRAWN BY	CR
PRINT DATE	2021 12 13
PERMIT NO	
AEI NO	21 066

1.1

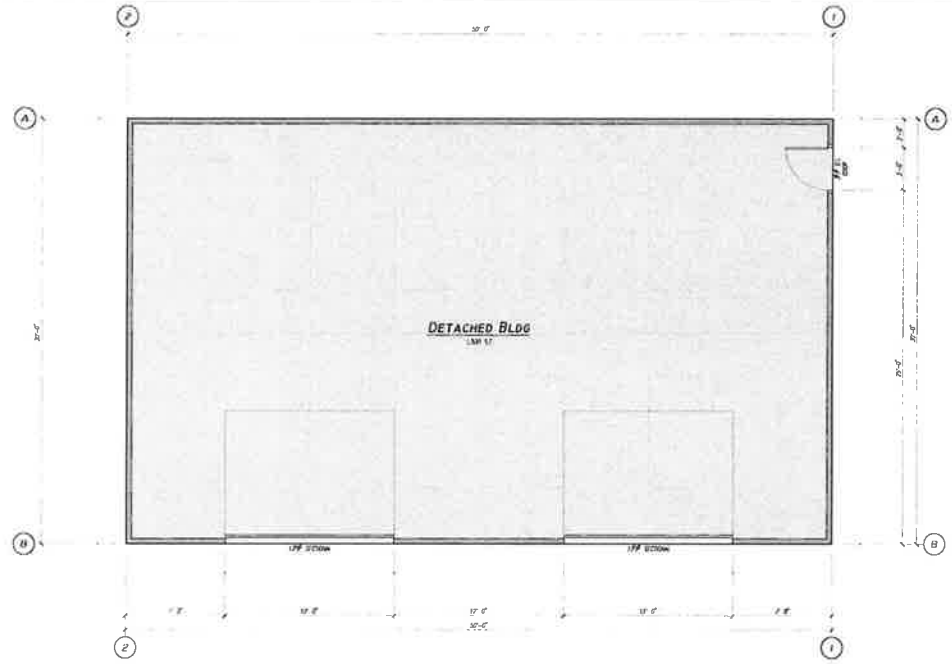

FLOOR PLAN

FLOOR PLAN NOTES

1. FRAMING
   - ALL LIGHT GAGE STEEL SHALL BE WELL CALIBRATED. TOUCH UP ANY AREAS AFFECTED BY WELDING OR THAT ARE OTHERWISE DAMAGED
   - ALL HEAVY STEEL SHALL BE COATED WITH A ZINC BASED SHOP PRIMER
2. INSULATION BLANKET
   - NO FOIL FACED INSULATION BLANKET TO BE INSTALLED IN ROOF
   - NO FOIL FACED INSULATION BLANKET TO BE INSTALLED IN ANY WALLS
3. SHEETING WALL COMPLIANT
   - MBI SALA 2-PANEL & TRIMS
   - COLOR OF ALL COMPONENTS AS SPECIFIED BY THE OWNER
   - INSTALL FOAM CLOSURES @ ALL LOCATIONS (TRUSS BUBBING EMBERS)
   - WATER PROOFING & WEATHERIZATION IS SOLELY THE RESPONSIBILITY OF THE INSTALLING CONTRACTOR
4. MAN DOORS WALL COMPLIANT
   - LIGHT GAGE STEEL FRAME & DOOR, NON COMBUSTIBLE
   - PAINT AS SPECIFIED BY THE OWNER
   - ALL GLAZING IN DOORS SHALL BE TEMPERED
   - LOCK SETS AS SPECIFIED BY THE OWNER, ACTING AS SPECIFIED BY THE OWNER
   - ADA COMPLIANT AS SPECIFIED BY THE OWNER
5. SECTIONAL DOORS WALL COMPLIANT
   - REINFORCED GRADE ALUMINUM, NON-COMBUSTIBLE
   - PAINT OR FACTORY COLOR AS SPECIFIED BY THE OWNER
   - INSTALL AUTOMATIC OPENERS W/FOB LOCKS AS SPECIFIED BY THE OWNER
6. SKYLIGHTS
   - MFR TOUL FIBERGLASS, WE BUILD
7. LANDINGS
   - CONC LANDING REQUIRED @ ALL DOORS, SEE "SITE PLAN" BY OWNERS
   - WITCH WIDTH OF DOOR + 1MN 3' OUT FROM BLDG + MIN 4" INCH.
   - MAX 4"-7" BLW LO. CONC BLDG SLAB FOR IN-SWING DOORS, FLUSH TO 1/4" DOWN FOR OUT-SWING DOORS. SLOPE TO DRAIN
10. GUTTERS
   - AS A MINIMUM, INSTALL GUTTERS ON ALL EAVES, WHERE GUTTERS ARE INSTALLED, ADD SCUPPERS TO PREVENT THE ACCUMULATION OF LEAVES & DEBRIS.
   - DOWN SPOUTS SHALL BE TERMINATED ON SPLASH BLOCKS OR PIPED AWAY FROM THE FOUNDATION. ALL DRAINAGE SHALL BE DIRECTED AWAY FROM THE FOUNDATION IN A MANNER TO PREVENT EROSION.

ARTISAN ENGINEERING INCORPORATED

PROJECT
CARPINTERIA
5775 CARPINTERIA AVENUE
CARPINTERIA, CA
APN

OWNER
CITY OF CARPINTERIA
5775 CARPINTERIA AVENUE
CARPINTERIA, CA

CONTRACTOR
P W S INC B-850705
5290 ORCUTT ROAD
SAN LUIS OBISPO, CA 93401
PHONE 805 547 8797
WWW.PWSSTEELBUILDINGS.COM

DRAWING TITLE
FLOOR PLAN

REVISIONS
△ PWS REVIEW 2021 11 8
△ SUBMITTAL FOR P.C. 2021 12 13

SUBMITTAL FOR PLAN CHECK

DRAWN BY CR
PRINT DATE 2021 12 13
PERMIT NO
AEI NO 21.066

2.1

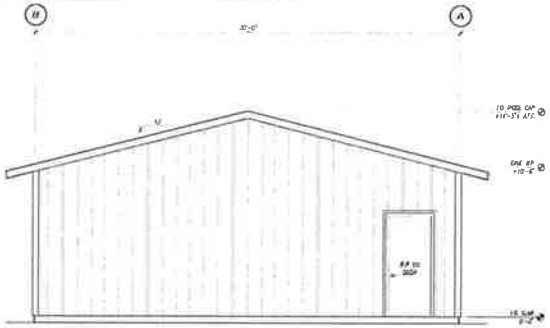

RIGHT EXTERIOR ELEVATION (C)

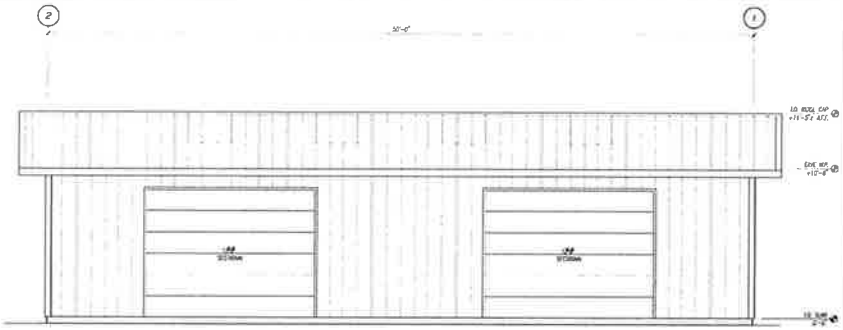

FRONT EXTERIOR ELEVATION (A)

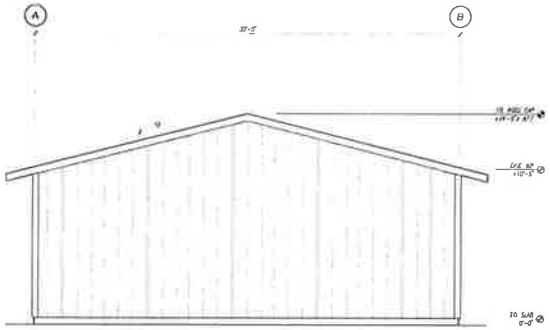

LEFT EXTERIOR ELEVATION (D)

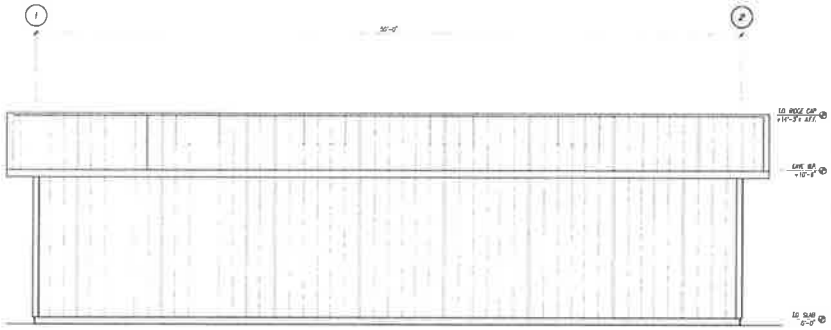

REAR EXTERIOR ELEVATION (B)

ARTISAN ENGINEERING INCORPORATED

PROJECT
CARPINTERIA
5775 CARPINTERIA AVENUE
CARPINTERIA, CA

APN:

OWNER
CITY OF CARPINTERIA
5775 CARPINTERIA AVENUE
CARPINTERIA, CA

CONTRACTOR
P W S INC B-850705
5290 ORCUTT ROAD
SAN LUIS OBISPO, CA 93401

PHONE 805 547 8797

WWW.PWSSTEELBUILDINGS.COM

DRAWING TITLE
EXTERIOR ELEVATIONS

REVISIONS
1 PWS REVIEW 2021 12 2
2 SUBMITTAL FOR P.C. 2021 12 13

SUBMITTAL FOR PLAN CHECK

DRAWN BY CR
PRINT DATE 2021 12 13
PERMIT NO.
AEI NO. 21.088

2.2

RIGHT EXTERIOR ELEVATION

C

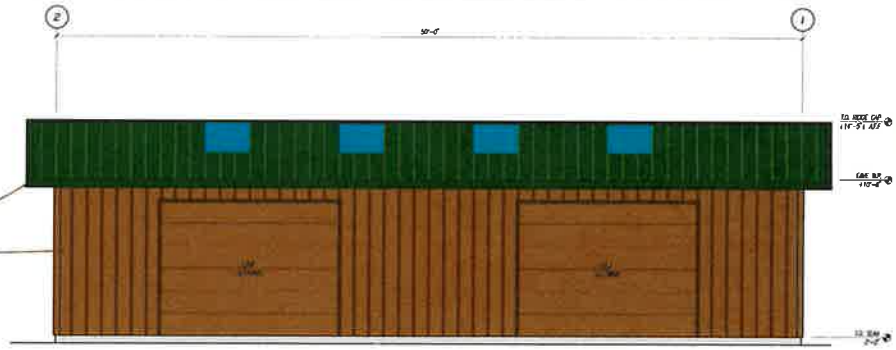

FRONT EXTERIOR ELEVATION

A

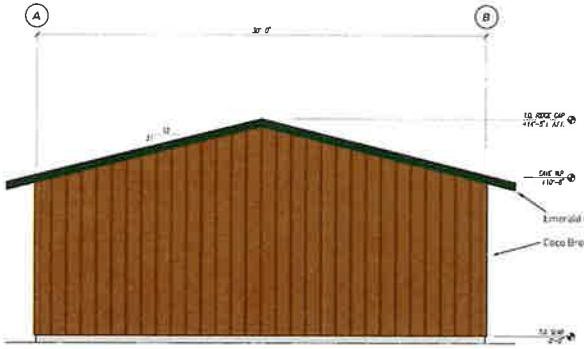

LEFT EXTERIOR ELEVATION

D

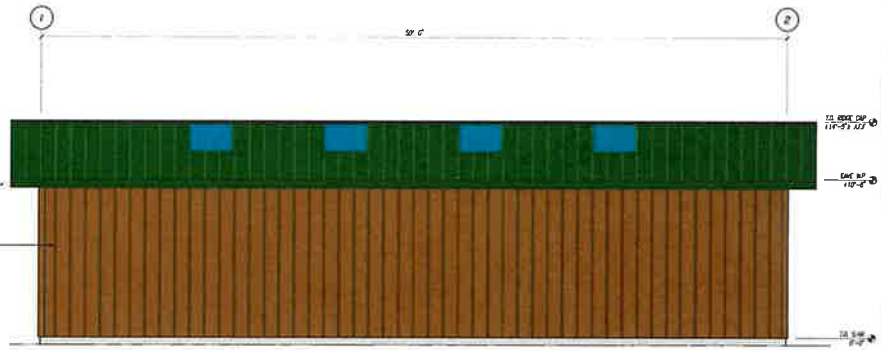

REAR EXTERIOR ELEVATION

B

EXTERIOR COLORS

ARTISAN ENGINEERING INCORPORATED

PROJECT

CARPINTERIA

5775 CARPINTERIA AVENUE
CARPINTERIA, CA

APN:

OWNER

CITY OF CARPINTERIA
5775 CARPINTERIA AVENUE
CARPINTERIA, CA

CONTRACTOR

P.W.S INC B-850705
5290 ORCUTT ROAD
SAN LUIS OBISPO, CA 93401

PHONE: 805.547.8797

WWW.PWSSTEELBUILDINGS.COM

DRAWING TITLE

EXTERIOR ELEVATIONS

REVISIONS

FWS Review	2021.0.2
SUBMITTAL FOR P C	2021.12.13

SUBMITTAL FOR PLAN CHECK

DRAWN BY	CR
PRINT DATE	2021.12.13
PERMIT NO	
AEI NO	21.088

2.2

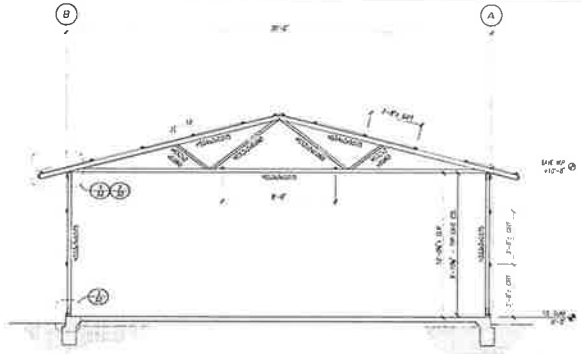

BUILDING SECTION

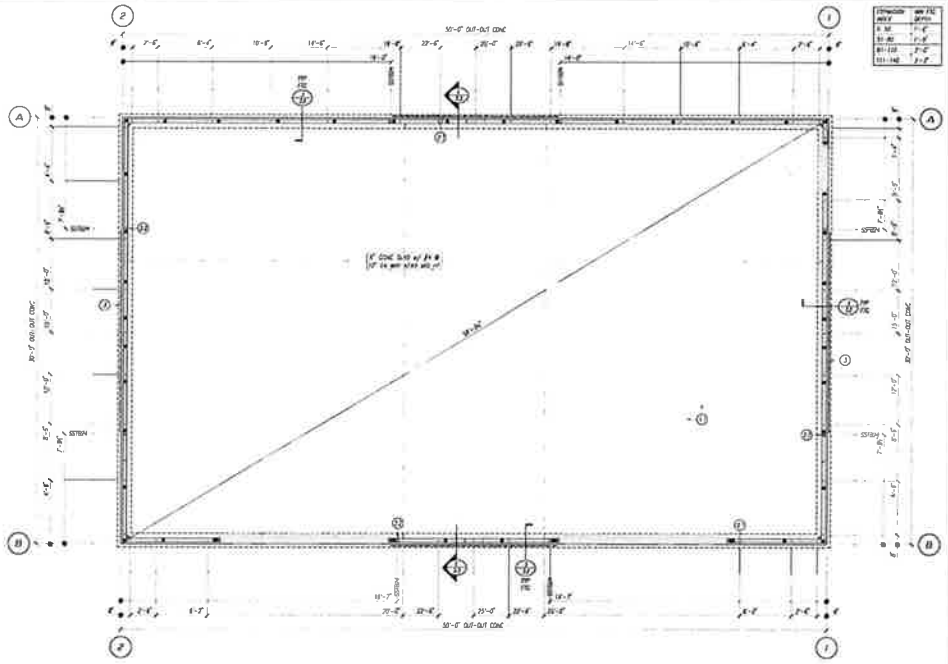

FOUNDATION PLAN NOTES

1. REFERENCE SHEETS S1 & S1 – S3 FOR GENERAL NOTES & TYPICAL DETAILS

2. EARTHWORK
   - SEE "FOUNDATIONS & SOILS" NOTES ON SHEET S1
   - EXTEND ALL FOOTINGS MIN 12" INTO NATIVE SOIL / MAXIMUM AS INSPECTED & APPROVED BY THE SOILS ENGR. EXCESSIVELY DEEP FOOTINGS MAY BE FILLED w/ (1) SACK SLURRY UP TO 1'-6" BLW GRADE, MIN FTG DEPTH IS 1'-6" BLW GRADE.
   - FIVE SOILS TACKS IS REQUIRED TO INSPECT & APPROVE THE FINAL FTG BOTTOMS & SLAB SUB-GRADE
   - PROPERLY MOISTEN & COMPACT ALL SUBGRADE UNDER THE SLAB VIA MECHANICAL MEANS
   - WRITTEN PAD CERTIFICATION IS NEEDED FROM THE SOILS REPORT

3. FOOTINGS
   - REFERENCE DETERMINING THE SOIL EXPANSION INDEX. MIN DEPTH IS 2'-3" BLW LOWEST ADJACENT GRD (MIN 2'-3" INTO NATIVE SOIL, BLW ANY FILL SOIL), MIN 2'-6" FROM TOP OF SLAB SEE 1/S3 & 3/S3
   - IF THE EXPANSION INDEX IS DETERMINED TO BE DEEPER THAN ANY OF PROVIDED PLAN THE SCHEDULE ABV w/ THE SHALLOWEST FTG PROVIDED BLOW 1'-6" BLW ADJACENT GRD. MIN 2'-0" FROM TOP OF SLAB
   - MIN WIDTH IS 12"
   - REINF w/ MIN (3) CONT TOP & BOT, MIN 3" CLR TO SOIL DOWEL TO ALL SLABS w/ #3 @ 24"
   - MIN 3,000 PSI CONC. SPECIAL INSPECTION IS NOT REQD

4. SLABS
   - MIN 4" NET THICKNESS w/ #3 @ 24" EA WAY NEAR MID PL CURVE SAWCUT IS OPTIONAL SEE 4/S3
   - MIN 0.015" POLYETHYLENE SHEET w/ ALL EDGES & PENETRATIONS SEALED FOR ABOVE GRADE SEASONAL CONDITIONS (REFER w/ THE OWNER) UPGRADE TO 0.015" STEEL CLASS "A" VAPOR RETARDER w/ ALL EDGES & PENETRATIONS SEALED PER MANUFACTURER'S SPECIFICATIONS.
   - MIN 3,000 PSI CONCRETE, SPECIAL INSPECTION IS NOT REQUIRED

5. EMBEDDED ITEMS
   - COORDINATE THE LOCATION OF ALL EMBEDDED ITEMS WITH THE FRAMING PLANS & APPROPRIATE DETAILS TO ALLOW FOR PROPER INSTALLATION
   - ALL EMBEDDED ITEMS MUST BE SECURELY TIED INTO PLACE BEFORE FOUNDATION "INSPECTION" BY THE "BUILDING OFFICIAL"
   - ALL ANCHOR BOLTS IN NEW CONCRETE ARE CAST-IN-PLACE UNLS

6. PAGE SHALL
   - VERIFY ALL DIMENSIONS & EXISTING CONDITIONS. REPORT ANY DISCREPANCIES IN WRITING TO ALL
   - COORDINATE THE WORK CONTAINED HEREIN WITH ALL OTHER WORK FOR THE PROJECT INCLUDING ARCHITECTURAL, CIVIL, MECHANICAL, PLUMBING, ELECTRICAL & LANDSCAPE
   - DETERMINE THE MEETS FOR & NATURE OF ALL TEMPORARY SUPPORTS, INCLUDING DESIGN & INSTALLATION OF SUCH SUPPORTS.
   - ENSURE BUILDING WATER PROOFING
   - ENSURE PROPER SITE DRAINAGE IN ADDITION TO EROSION & DUST CONTROL MEASURES
   - MEET HEATING REQUIREMENTS, PASSIVE &/OR ACTIVE
   - PREPARE FOR NON-SLIP SURFACES AS MAY BE REQUIRED
   - VERIFY w/ THE OWNER ALL FINISHES, COLORS, TEXTURES
   - VERIFY ALL OTHER NON-STRUCTURAL ITEMS

FOUNDATION PLAN

FOUNDATION PLAN KEY NOTES

1. FOUNDATION
   1. SLAB JOINT, CONTRACTOR TO VERIFY LAYOUT. SEE 4/S1
2. FASTENERS
   1. 5/8" x 12" J-BOLT w/ 3" WASHER, EMB PER 8/S1 & 9/S1 & 3/S2
   2. SIMPSON STRONG ANCHOR BOLT FOR STRONG HOLD DOWN, TOP OF (8) PER 10/S1
3. SLAB SLOPE & DRAINAGE
   - 8"x3x3 + 16"x 12" SLOPED TOP & BOT EA END (16) #10 SHS EA SIDE DOUBLE TO COL & BASE RAIL/BLK
   - 8" x3x3 + 16" SLOPE (SAME AS) w/ (24) #10 SHS EA END & SPACE, (4) #10 SHS EA INTERMEDIATE COLUMN
   - SIMPSON STRONG EA END
   - SEE 1/S3 – 2/S3 – 3/S3

EXPANSION INDEX	MIN FTG DEPTH
0-50	1'-6"
51-90	1'-8"
91-130	2'-0"
131-140	2'-3"

ARTISAN ENGINEERING INCORPORATED

PROJECT
CARPINTERIA
5775 CARPINTERIA AVENUE
CARPINTERIA, CA

APN:

OWNER
CITY OF CARPINTERIA
5775 CARPINTERIA AVENUE
CARPINTERIA, CA

CONTRACTOR
P W S INC B-850705
5290 ORCUTT ROAD
SAN LUIS OBISPO, CA 93401

PHONE 805 547.8797

WWW.PWSSTEELBUILDINGS.COM

DRAWING TITLE
EXTERIOR ELEVATIONS
BUILDING SECTION

REVISIONS
1 PER REVIEW 2021 11 3
2 SUBMITTAL FOR P C 2021 12 13

SUBMITTAL FOR PLAN CHECK

DRAWN BY CR
PRINT DATE 2021 12 13
PERMIT NO
AEI NO 21 088

2.3

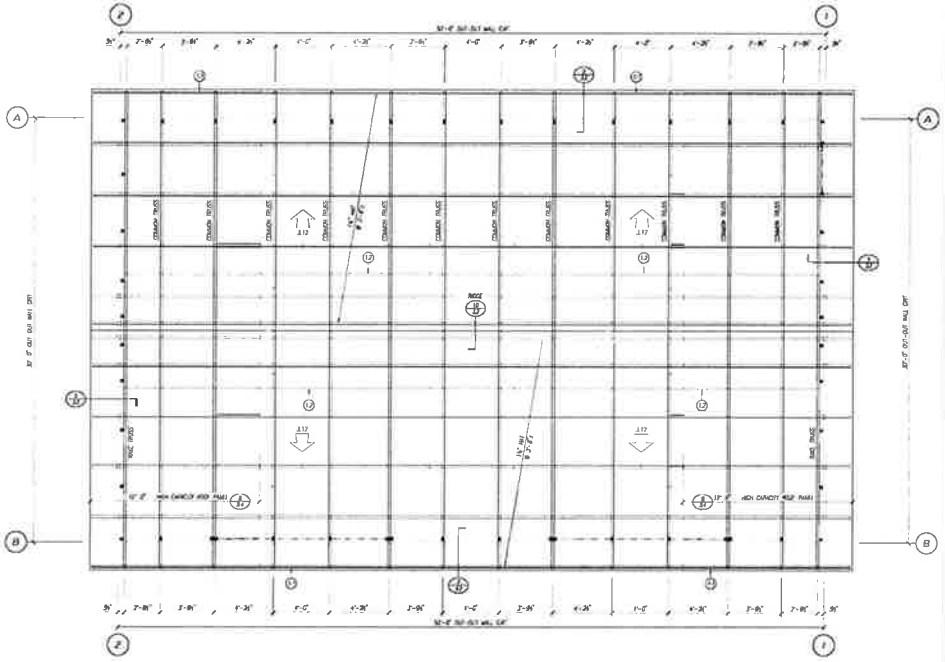

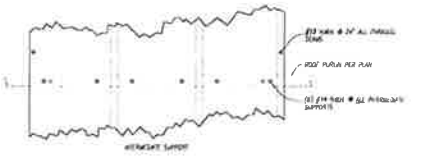

High Capacity R-Panel Fastener Layout (B)

1" = 1'-0"

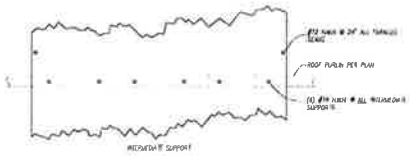

Standard R-Panel Fastener Layout (A)

1" = 1'-0"

Roof Framing Notes

1. REFER TO SHEETS L1 & S1 – S3 FOR GENERAL NOTES & TYPICAL DETAILS.
2. ROOF FRAMING:
   - COMMON TRUSS, (11) PER T/S3
   - HIP TRUSS, (1) PER T/S3
3. ROOF SHEATHING IS STRUCTURAL & REQUIRED TO RESIST WIND/SEISMIC LOADS. FASTENERS ARE REQUIRED AT EACH PURLIN/GIRT, AT THE PERIMETER & AT SHEAR SEAMS. SEE PLANS FOR SPECIFIC SCREW SIZE & SPACING.
   - R-PANEL WITH 24GA + 1½" + 3¾" COPRIMAT – INSTALLED OVER THERMAL BLANKET
   - FASTEN TO SUPPORTS w/ #14 HWH PER 8/S3 "STANDARD R-PANEL FASTENER LAYOUT"
   - FASTEN NEAR END WALLS w/ #14 HWH PER 8/S3 "HIGH CAPACITY R-PANEL FASTENER LAYOUT"
   - STITCH ALL PARALLEL SEAMS w/ #14 HWH @ 24" FOR ALL CONDITIONS
4. WALL SHEATHING IS STRUCTURAL & REQUIRED TO RESIST WIND/SEISMIC LOADS. FASTENERS ARE REQUIRED AT EACH PURLIN/GIRT, AT THE PERIMETER & AT SHEAR SEAMS. SEE PLANS FOR SPECIFIC SCREW SIZE & SPACING.
   - R-PANEL WITH 24GA + 1½" + 3¾" COPRIMAT – INSTALLED OVER THERMAL BLANKET
   - FASTEN TO SUPPORTS w/ #14 HWH PER 8/S3 "STANDARD R-PANEL FASTENER LAYOUT"
   - STITCH ALL PARALLEL SEAMS w/ #14 HWH @ 24" FOR ALL CONDITIONS

Roof Framing Plan

1" = 1'-0"

Roof Framing Plan Key Notes

1. 3½" MB
   1. "TENSION" SPLICE w/ (8) #10 SMS EA SIDE .004 PER 11/S1
   2. NOW @ TRUSS BOT CHORD w/ (4) #10 SMS. 10 LA TRUSS & LA SPACE

ARTISAN ENGINEERING INCORPORATED

Project: CARPINTERIA
5775 Carpinteria Avenue
Carpinteria, CA
APN

Owner:
City of Carepinteria
5775 Carpinteria Avenue
Carpinteria, CA

Contractor:
P W S Inc B-850705
5290 Orcutt Road
San Luis Obispo, CA 93401
Phone 805 547 8797
www.PWSSteelBuildings.com

Drawing Title: Foundation Plan

Revisions:
1. PWS Review 2021 11 8
2. Submittal For P.C. 2021 12 13

Submittal For Plan Check

Drawn By: CR
Print Date: 2021 12 13
Permit No:
AEI No: 21 088

2.4

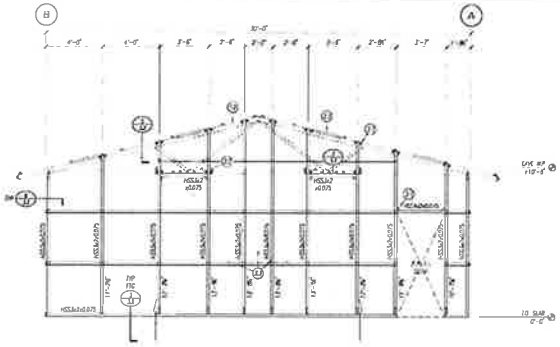

WALL FRAMING ELEVATION - LINE 1 (C)

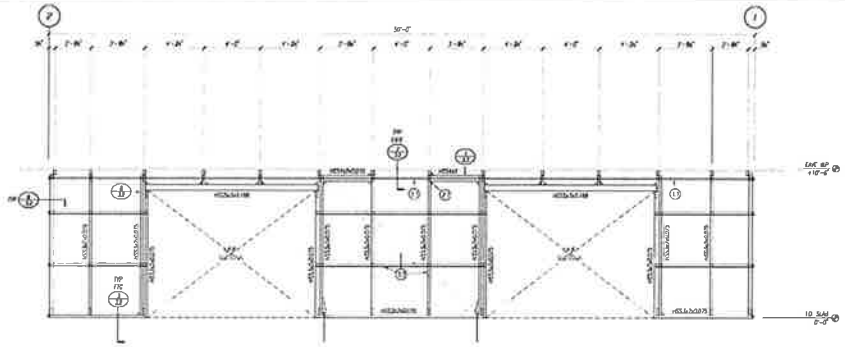

WALL FRAMING ELEVATION - LINE B (A)

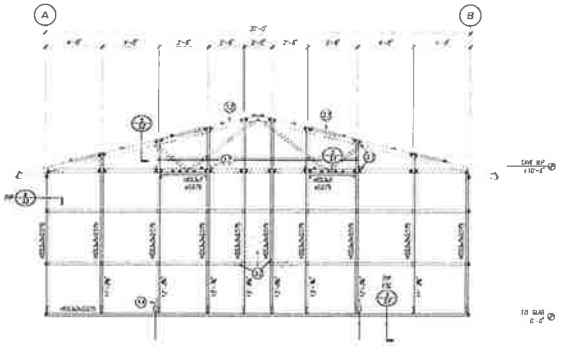

WALL FRAMING ELEVATION - LINE 2 (D)

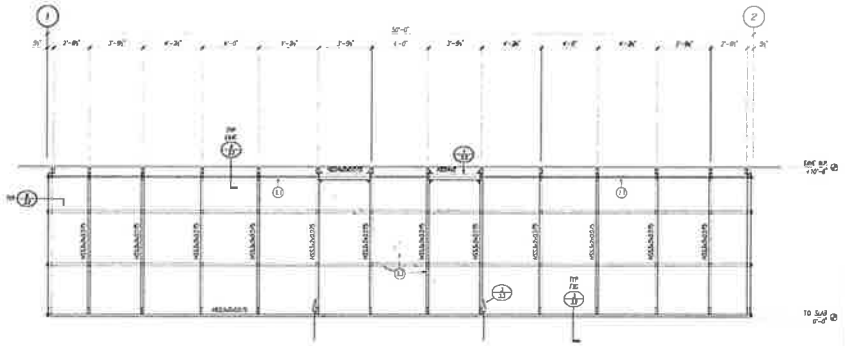

WALL FRAMING ELEVATION - LINE A (B)

WALL FRAMING ELEVATION KEY NOTES

1. 16" DIA
   1. CONT w/ "TENSION" SPICE ALL JOINTS w/ (8) #10 SMS PER 11/S3 & #14 HEX PER 4/S4 FROM U-PANEL
   2. ADJ. SLOPED UP RAKE @ TOP OF FRAG. INSTALL (3) #10 SMS EA CONTACT
2. FRAMING
   1. TOP AS SHOWN 12x2 "AB" w/ (2) #10 SMS EA LEG, SEE 7/S3
   2. 12x2x0.060 x 5" @ CEN. BESIDE BLK FOR STORAGE, (5) LOCATIONS INSTALL (1) #10 SMS EA CONTACT
   3. 12x2x0.060 x 24" SHEAR CLIP w/ (4) #14 HEX FROM BODY SHEETING & (4) #10 SMS TO RAKE TRUSS, (8) EA FRG BRK. SEE 3/S3
3. FLAT STRAP & BRACING
   1. 8-GAUGE x 16'-1" GUSSET TOP & BOT EA END (18) #10 SMS EA SIDE GUSSET TO COL & BASE RAB/BLK
   2. 8-GAUGE x 24" STRAP (GRD 50) w/ (24) #10 SMS EA END & SPLICE
   3. (1) #10 SMS EA INTERMEDIATE CONTACT
   4. TEMPORY SPRIGS EA LEG, SEE 1/S3 - 2/S3 - 3/S3

ARTISAN ENGINEERING INCORPORATED

PROJECT

CARPINTERIA

5775 CARPINTERIA AVENUE
CARPINTERIA, CA

APN

OWNER

CITY OF CARPINTERIA
5775 CARPINTERIA AVENUE
CARPINTERIA, CA

CONTRACTOR

P W S INC B-850705
5290 ORCUTT ROAD
SAN LUIS OBISPO, CA 93401

PHONE 805 547 8797

WWW.PASSTEELBUILDINGS.COM

DRAWING TITLE

WALL FRAMING ELEVATIONS

REVISIONS

∠	FWG REVIEW	2021 11 3
△	SUBMITTAL FOR P.C.	2021 12 13

SUBMITTAL FOR PLAN CHECK

DRAWN BY	CR
PRINT DATE	2021 12 13
PERMIT NO	
AEI NO	21 088

2.5

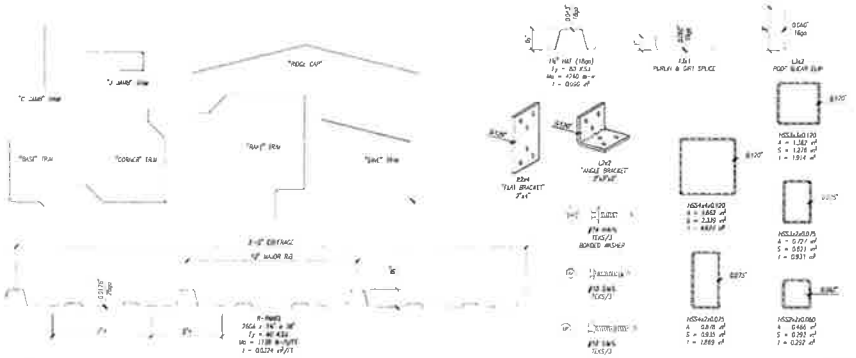

Typical Members 7
1" = 1'-0"

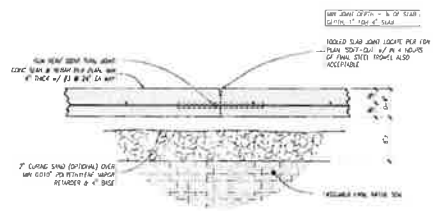

Typical Slab Section & Slab Joint 4
1/4" = 1'-0"

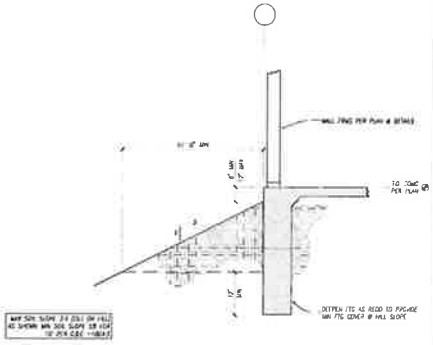

Minimum Footing Penetration 1
1/4" = 1'-0"

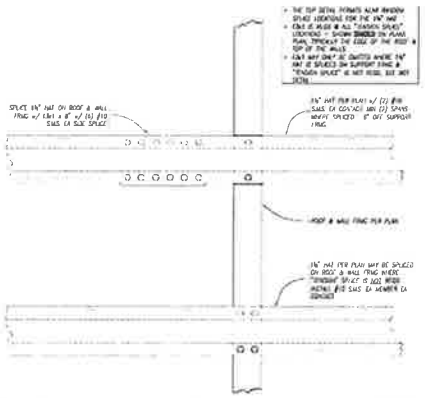

Typical Purlin & Girt Splice 11
1" = 1'-0"

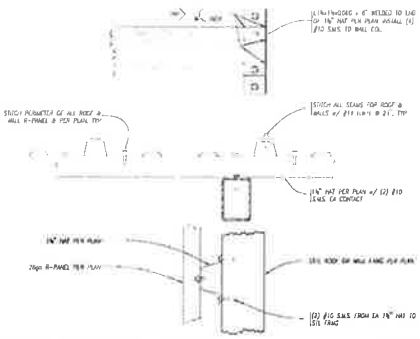

Typical Purlin & Girt Framing 8
1" = 1'-0"

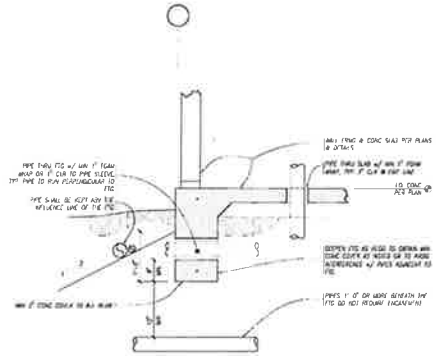

Pipes Near Footings 5
1/4" = 1'-0"

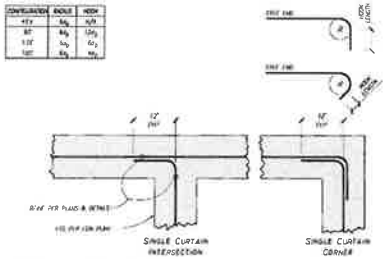

Typical Footing Reinforcing 2
1/4" = 1'-0"

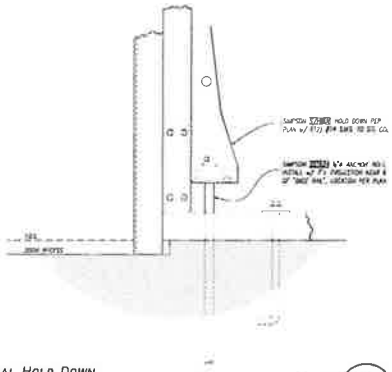

Typical Hold Down 12
1" = 1'-0"

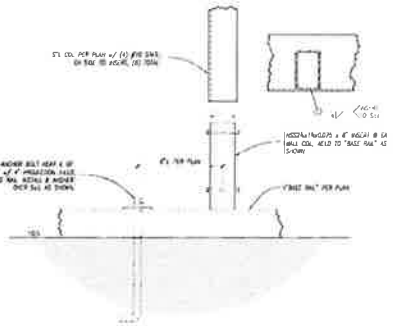

Typical "Base Rail" with Insert 9
1" = 1'-0"

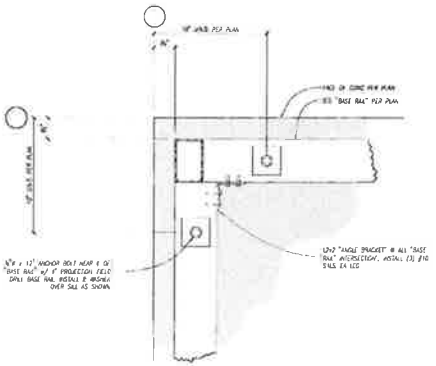

Typical "Base Rail" Layout Near Corner - Plan View 6
1" = 1'-0"

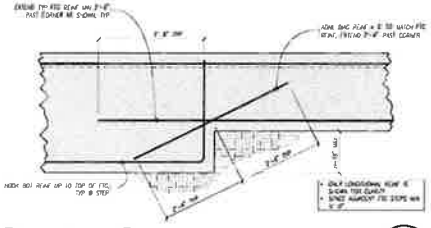

Typical Stepped Footing 3
1/4" = 1'-0"

ARTISAN ENGINEERING INCORPORATED

Project
CARPINTERIA
5775 Carpinteria Avenue
Carpinteria, CA

APN

Owner
City of Carpinteria
5775 Carpinteria Avenue
Carpinteria, CA

Contractor
P W S Inc B-850705
5290 Orcutt Road
San Luis Obispo, CA 93401
Phone 805 547 8797
www.pwssteelbuildings.com

Drawing Title
Typical Construction Details

Revisions
Submittal For Plan Check

Submittal For Plan Check

Drawn By CR
Print Date 2021 12 13
Permit No
AEI No 21 088

3.1

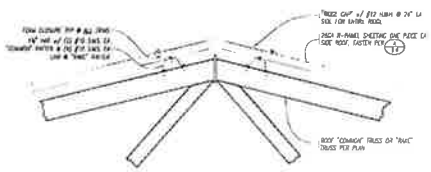

TYPICAL FRAMING AT RIDGE (10)

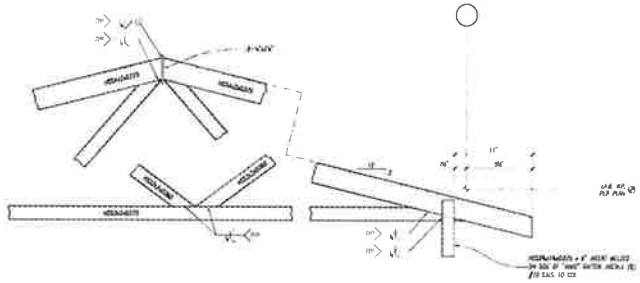

TYPICAL "RAKE" TRUSS - HIGH ROOF (7)

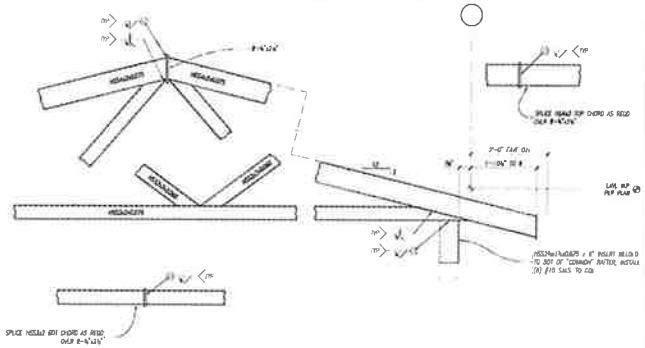

TYPICAL "COMMON" TRUSS - HIGH ROOF (1)

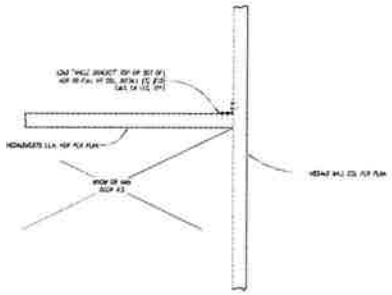

TYPICAL NON-LOAD BEARING HEADER & SILL (11)

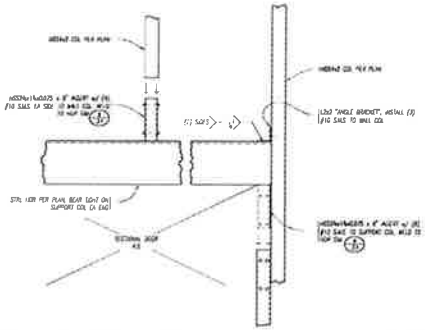

TYPICAL LOAD BEARING HEADER (8)

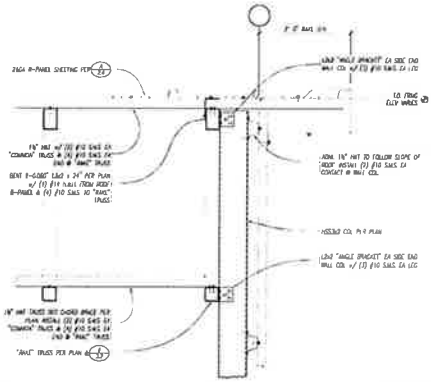

TYPICAL RAKE FRAMING - HIGH ROOF (5)

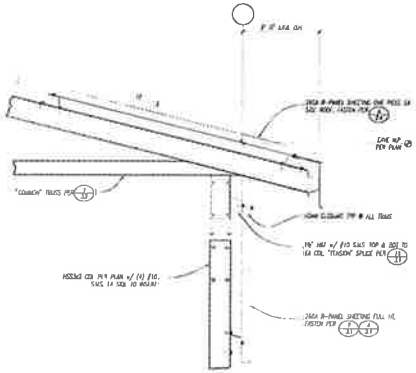

TYPICAL EAVE FRAMING - HIGH ROOF (2)

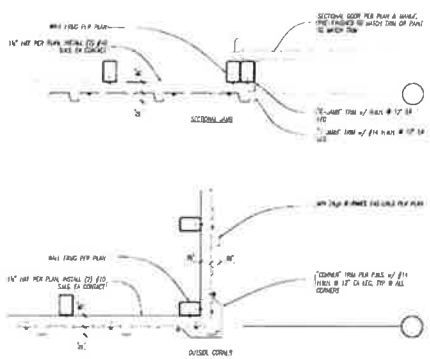

TRIM INSTALLATION - PLAN (6)

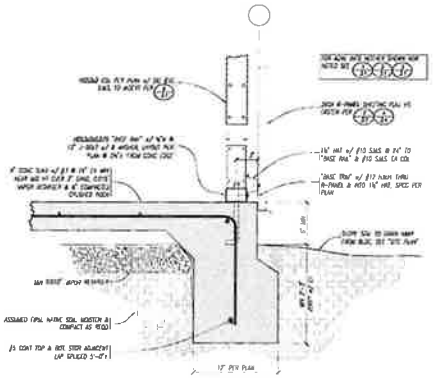

TYPICAL PERIMETER FOOTING (3)

ARTISAN ENGINEERING INCORPORATED

PROJECT
CARPINTERIA
5775 CARPINTERIA AVENUE
CARPINTERIA, CA

APN:

OWNER
CITY OF CAREPINTERIA
5775 CARPINTERIA AVENUE
CARPINTERIA, CA

CONTRACTOR
P W S INC B-850705
5290 ORCUTT ROAD
SAN LUIS OBISPO, CA 93401

PHONE 805 547 8797

WWW.PWSSTEELBUILDINGS.COM

DRAWING TITLE
METAL BUILDING DETAILS

REVISIONS
△ PNS REVIEW 2021 12 2
△ SUBMITTAL FOR P.C. 2021 12 13

SUBMITTAL FOR PLAN CHECK

DRAWN BY CR
PRINT DATE 2021 12 13
PERMIT NO
AEI NO 21 088

3.2

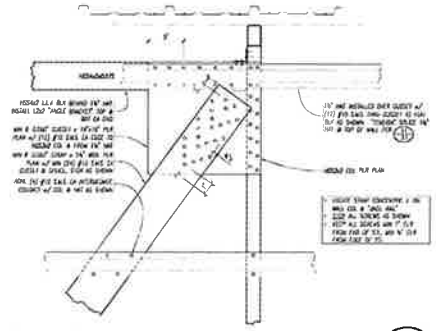

DIAGONAL STRAP BRACING AT "EAVE" — 1

1/4" = 1'-0"

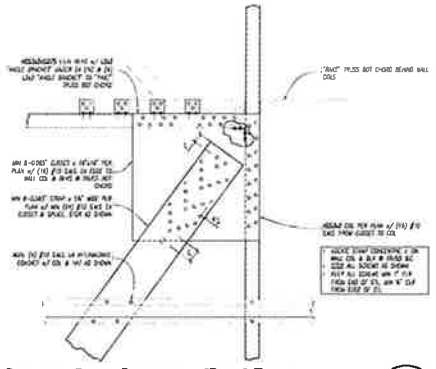

DIAGONAL STRAP BRACING AT "RAKE" TRUSS — 2

1/4" = 1'-0"

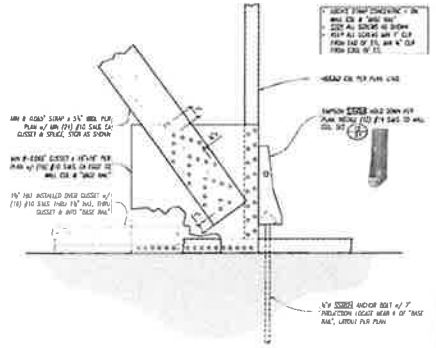

DIAGONAL STRAP BRACING AT FOUNDATION — 3

1/4" = 1'-0"

ARTISAN ENGINEERING INCORPORATED

PROJECT

CARPINTERIA

5775 CARPINTERIA AVENUE
CARPINTERIA, CA

APN:

OWNER

CITY OF CAREPINTERIA
5775 CARPINTERIA AVENUE
CARPINTERIA, CA

CONTRACTOR

P W S INC B-850705
5290 ORCUTT ROAD
SAN LUIS OBISPO, CA 93401

PHONE 805 547.8797

WWW.PWSSTEELBUILDINGS.COM

DRAWING TITLE

METAL BUILDING DETAILS

REVISIONS

△	PWS REVIEW	2021 11 2
△	SUBMITTAL FOR P.C.	2021 12 13

SUBMITTAL FOR PLAN CHECK

DRAWN BY	CR
PRINT DATE	2021 12 13
PERMIT NO	
AEI NO	21 088

3.3

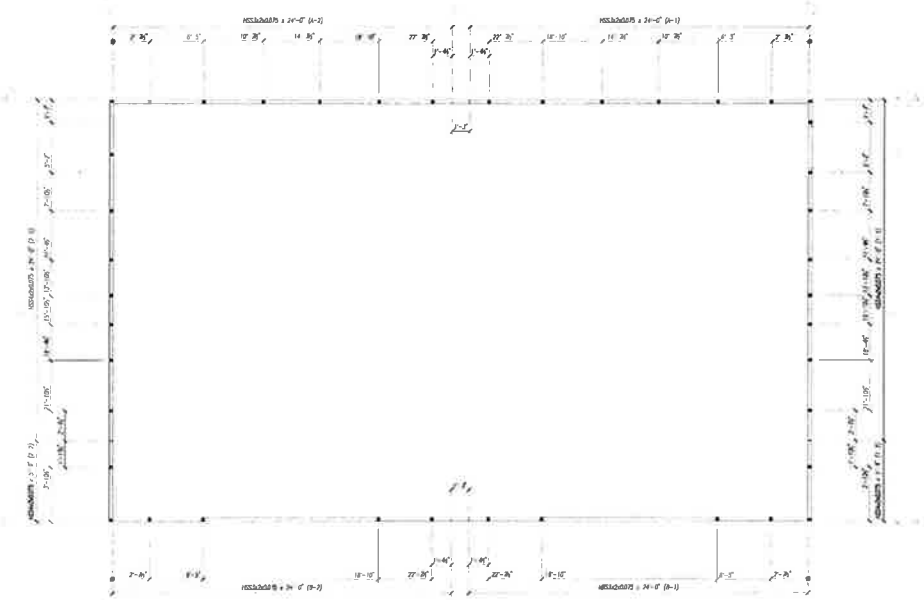

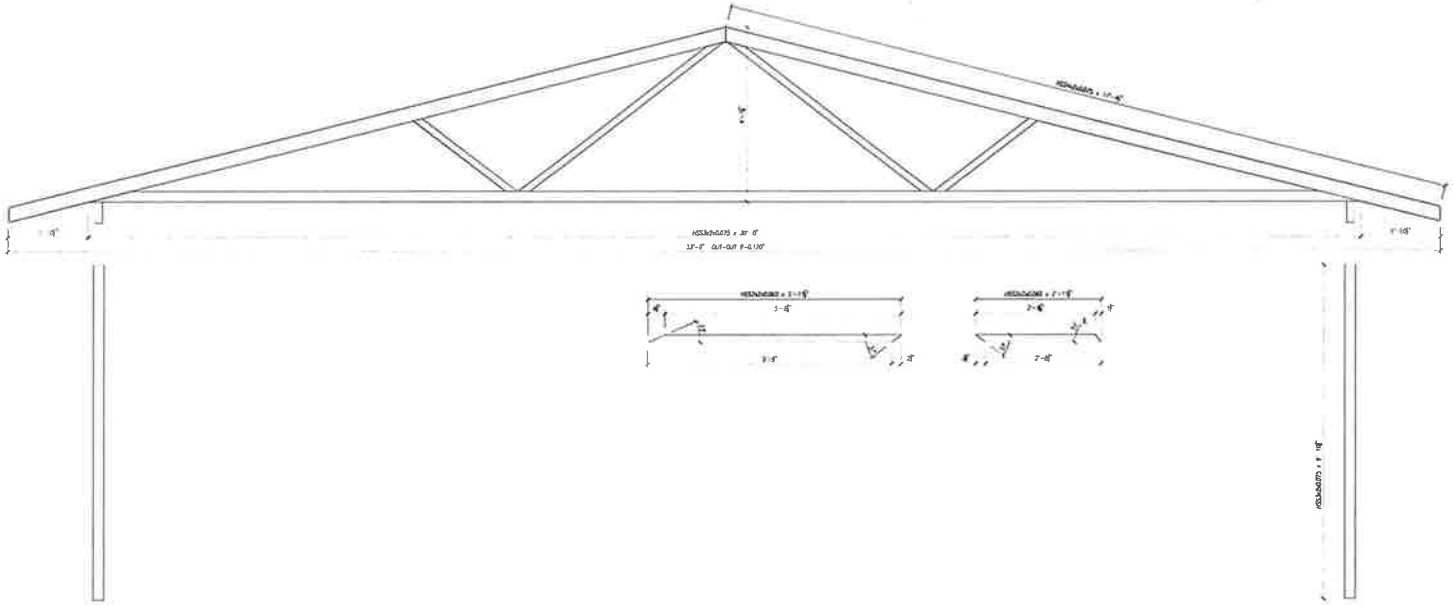

ARTISAN ENGINEERING INCORPORATED

PROJECT
CARPINTERIA
5775 CARPINTERIA AVENUE
CARPINTERIA, CA

APN

OWNER
CITY OF CARPINTERIA
5775 CARPINTERIA AVENUE
CARPINTERIA, CA

CONTRACTOR
P W S INC B-850705
5290 ORCUTT ROAD
SAN LUIS OBISPO, CA 93401
PHONE 805 547 8797
WWW.PWSSTEELBUILDINGS.COM

DRAWING TITLE
BASE RAIL & TRUSS CUT LENGTHS

REVISIONS
1 PWS REVIEW 2021.11.8
2 SUBMITTAL FOR P.C. 2021.12.13

SUBMITTAL FOR PLAN CHECK

DRAWN BY CR
PRINT DATE 2021.12.13
PERMIT NO
AEI NO 21.088

4.1

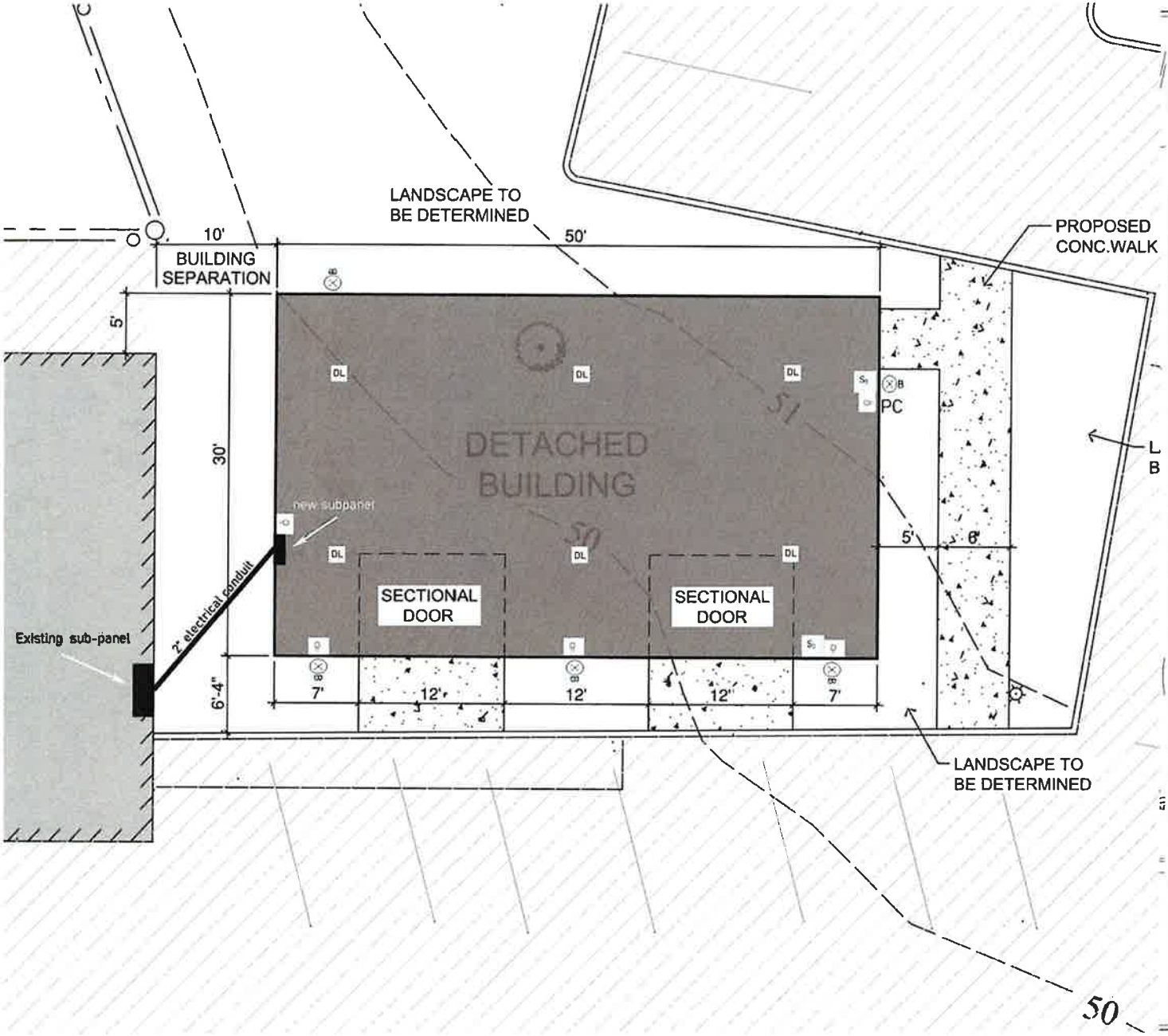

LAYOUT LEGEND

SYM	DESCRIPTION
PC	Photo cell
	existing panel 225 AMP 3 Phase General Electric
	PROPOSED BUILDING
	5 Quantity E-WD601A-C30UK-A14 Econolight (B)
	6 Quantity E-CSA12A-W50Z res Econolight DL
	EXISTING LIGHT POLE

LAYOUT NOTES

Existing Panel Data Plate

DETACHED BUILDING - CITY HALL

CITY OF CARPINTERIA

5775 CARPINTERIA AVENUE
CARPINTERIA, CALIFORNIA

REVISIONS

REV	DATE	DESCRIPTION

SHEET NAME
LAYOUT PLAN

DRAWN BY	
CHECKED BY	
ISSUE DATE	07-25-2012
JOB NO.	2013

SHEET
E-1

Exhibit 1
Attachment C: Recommended Conditions of Approval

City Hall Storage Building
20-2194-DP/CDP

May 1, 2023

ATTACHMENT C
CONDITIONS OF APPROVAL

PLANNING COMMISSION HEARING
PROJECT NO. 22-2194-DP/CDP
MAY 1, 2023

City Hall Storage Building
5775 Carpinteria Avenue

PROJECT DESCRIPTION

1. This Development Plan and Coastal Development Permit approval is based upon and limited to compliance with the project description, the hearing exhibits dated May 1, 2023, and conditions of approval set forth below. Any deviations from the project description, exhibits or conditions must be reviewed and approved by the City for conformity with this approval. Deviations may require approved changes to the permit and/or further environmental review. Deviations without the above described approval will constitute a violation of permit approval.

   The project description is as follows:

   A new 1,500 square-foot storage building with a maximum height of 15-feet on the City Hall property. The project would include new landscaping and hardscape in the vicinity of the proposed structure.

PROJECT SPECIFIC CONDITIONS

2. The design, scale, and character of the project architecture, landscape, and hardscape shall be compatible and blend harmoniously with development in the vicinity and be consistent with the City's "small beach town" character. **Plan Requirement and Timing:** The applicant shall submit plans for the project for final review by the Architectural Review Board prior to approval of any Building Permit for physical development. **Monitoring:** Community Development Department staff (CDD) shall review submitted plans, provide direction to the ARB regarding this mitigation measure and site inspect during the construction phase.

3. No signs of any type are approved with this action unless otherwise specified. All signs require a separate Sign Permit and review by the Architectural Review Board and shall comply with the City Code Chapter 14 (Sign Regulations).

4. Any exterior night lighting installed on the project site shall be of low intensity, low glare design, minimum height, and shall be hooded and shielded to direct light downward onto the subject parcel and prevent spill-over onto adjacent parcels. **Plan Requirements**: The locations of all exterior lighting fixtures shall be depicted on a Building/Lighting Plan to be reviewed and approved by CDD prior to Building Permit issuance.

5. All construction security night lighting set up on the project site shall be of low intensity, low glare design, minimum height, and shall be hooded to direct light downward onto the subject parcel and prevent spill-over onto adjacent parcels. **Monitoring**: Building and/or Engineering Inspector shall inspect construction site to ensure that temporary exterior construction security lighting fixtures have been installed consistent with this condition.

6. The developer shall clear the project site of all excess construction debris. **Plan Requirement:** This requirement shall be noted on final building plans. **Timing:** Debris clearance shall occur prior to final inspection. **Monitoring:** CDD shall site inspect prior to final inspection.

7. If the construction site is graded and left undeveloped for over three weeks, the applicant shall employ the following methods immediately to inhibit dust generation:

   a. seeding and watering to revegetate graded areas; and/or
   b. spreading of soil binders; and/or
   c. any other methods deemed appropriate by Community Development.

   Plan Requirements: These requirements shall be noted on all plans. **Timing:** Plans are required prior to issuance of a Grading or Building Permit. **Monitoring:** Grading Inspector shall perform periodic site inspections.

8. Dust generated by the development activities shall be kept to a minimum with a goal of retaining dust on the site by following the dust control measures listed below. During clearing, grading, earth moving, excavation or transportation of cut or fill materials, water trucks or sprinkler systems shall be used to prevent dust from leaving the site and to create a crust after each day's activities cease.

   a. During construction, use water trucks or sprinkler systems to keep all areas of vehicle movement damp enough to prevent dust from leaving the site. At a minimum, this shall include wetting down such areas in the late morning and after work is completed for the day. Increased watering frequency shall be required whenever the winds speed exceeds 15 miles per hour. Reclaimed water should be used whenever possible.
   b. Minimize amount of disturbed area.
   c. If importation, exportation and stockpiling of fill material is involved, soil stockpiled for more than two days shall be covered, kept moist or treated with soil binders to prevent dust generation. Trucks transporting fill material to and from the site shall be tarped form the point of origin.
   d. After clearing, grading, earth moving or excavation is completed, treat the disturbed area by watering, or revegetating, or by spreading soil binders until the area is paved or otherwise developed so that dust generation will not occur.

   Plan Requirements: All requirements shall be shown on the building plans. **Timing:** Condition shall be adhered to throughout all construction activities. **Monitoring:** CDD shall ensure measures are on plans. Building Inspector shall spot check and ensure compliance onsite. APCD inspectors shall respond to nuisance complaints.

9. The contractor or builder shall designate a person or persons to monitor the dust control program and to order increased watering as necessary to prevent transport of dust offsite. Their duties

shall include holiday and weekend periods when work may not be in progress. **Plan Requirements:** The name and telephone number of such persons shall be provided to the APCD. **Timing:** The dust monitor shall be designated prior to issuance of a Grading or Building Permit. **Monitoring:** CDD shall contact the designated monitor as necessary to ensure compliance with dust control measures.

10. The following Diesel Exhaust Control Measures should be implemented during construction activities:

    a. Diesel construction equipment meeting the California Air Resources Board's current emission standards for off-road heavy-duty diesel engines shall be used.
    b. The engine size of construction equipment shall be the minimum practical size.
    c. The number of construction equipment operation simultaneously shall be minimized through efficient management practices to ensure that the smallest practical number is operating at any one time.
    d. Construction equipment shall be maintained in tune per the manufacturer's specifications.
    e. Construction equipment operating onsite shall be equipped with two to four degree engine timing retard or pre-combustion chamber engines.
    f. Catalytic converters shall be installed on gasoline-powered equipment, if feasible.
    g. Catalytic converters, diesel oxidation catalysts and diesel particulate filters as certified and/or verified by EPA or California shall be installed on equipment operating onsite.
    h. Diesel powered equipment should be replaced by electric equipment whenever feasible.
    i. State law requires that idling of heavy-duty diesel trucks during loading and unloading shall be limited to five minutes; auxiliary power units should be used whenever possible.

    Plan Requirements: All requirements shall be shown on grading and building plans. **Timing:** Condition shall be adhered to throughout all grading and construction activities. **Monitoring:** CDD shall ensure measures are on plans. Grading and Building Inspectors shall spot check and ensure compliance onsite.

11. In the event archaeological remains are encountered during grading, work shall be stopped immediately or redirected until a CDD-qualified archaeologist and Native American representative are retained by the applicant to evaluate the significance of the find pursuant to Phase 2 investigations of the City Archaeological Guidelines. If remains are found to be significant, they shall be subject to a Phase 3 mitigation program consistent with City Archaeological Guidelines and funded by the applicant. **Plan Requirements/Timing:** This condition shall be printed on all building and grading plans. **Monitoring:** CDD shall check plans prior to issuance of a Grading or Building Permit and shall spot check in the field.

12. Grading and erosion and sediment control plans shall be designed to minimize erosion and shall include the following:

    a. Methods such as geotextile fabrics, erosion control blankets, retention basins, drainage diversion structures, siltation basins and spot grading shall be used to reduce erosion and siltation during grading and construction activities.
    b. All entrances/exits to the construction site shall be stabilized (e.g., using rumble plates, gravel beds or other best available technology) to reduce transport of sediment offsite.

Any sediment or other materials tracked offsite shall be removed the same day as they are tracked using dry cleaning methods.

c. Storm drain inlets shall be protected from sediment-laden waters by the use of inlet protection devices such as gravel bag barriers, filter fabric fences, block and gravel filters and excavated inlet sediment traps.

d. Graded areas shall be revegetated within three weeks of grading activities with deep rooted, native, drought-tolerant species to minimize slope failure and erosion potential. Geotextile binding fabrics shall be used if necessary to hold slope soils until vegetation is established.

Plan Requirements: The grading and erosion and sediment control plan shall be submitted for review and approved by CDD prior to issuance of a Grading Permit. The plan shall be designed to address erosion and sediment control during all phases of development of the site. The applicant shall notify CDD prior to commencement of grading. **Timing:** Components of the grading plan shall be implemented prior to occupancy clearance. Erosion and sediment control measures shall be in place throughout grading and development of the site until all disturbed areas are permanently stabilized. **Monitoring:** CDD shall inspect revegetation and ensure compliance with plan. Grading inspector shall monitor installation and maintenance of erosion control measure throughout all grading and construction activities.

13. The applicant shall limit excavation and grading to the dry season of the year (April 15 to November 1) unless an approved erosion and sediment control plan is in place and all measures therein are in effect. All exposed graded surfaces shall be reseeded with ground cover vegetation to minimize erosion. **Plan Requirements:** This requirement shall be noted on all grading and building plans. **Timing:** Graded surfaces shall be reseeded within three weeks of grading completion, with the exception of surfaces graded for the placement of structures. These surfaces shall be reseeded if construction of structures does not commence within three weeks of grading completion. **Monitoring:** CDD shall site inspect during grading and three weeks after grading to verify reseeding and to verify the construction has commenced in areas graded for placement of structures.

14. Construction activity for site preparation and for future development shall be limited to the hours between 7:00 a.m. and 5:00 p.m., Monday through Friday. No construction shall occur on State holidays (e.g., Thanksgiving, Labor Day). Construction equipment maintenance shall be limited to the same hours. Non-noise generating construction activities such as interior painting are not subject to these restrictions, however the Community Development Director may restrict interior construction activities if it is determined that the activity creates a public nuisance. **Plan Requirements:** Two signs stating these restrictions shall be provided by the applicant and posted on site. **Timing:** Signs shall be in place prior to the beginning of and throughout all grading and construction activities. Violations may result in suspension of permits. **Monitoring:** Building Inspector shall spot check and respond to complaints.

15. All construction equipment shall be maintained in proper operating condition and fitted with standard noise reduction features (e.g., mufflers). **Timing:** During all construction activities. **Monitoring:** CDD staff shall notify the contractor of this requirement prior to construction and spot check in the field.

16. In compliance with the Water Conservation in Landscaping Act of 2006 (Assembly Bill 1881, Laird) and Chapter 15.90 of the City's Municipal Code: Water Efficient Landscaping, a Landscape Documentation Package containing the following elements shall be prepared by a design professional: project information; water efficient landscape worksheet; soil management report; landscape design plan; irrigation design plan; and grading design plan. The preparation of a Certificate of Completion containing the following elements shall also be prepared by a design professional: certification of installation (per the approved plan); final soils information; irrigation scheduling parameters; maintenance schedules; and irrigation audit report. **Plan Requirements and Timing:** Prior to approval of a Building Permit, the applicant shall submit a Landscape Documentation Package to the CDD for review and approval. The CDD shall send a copy of the Documentation Package to the Carpinteria Valley Water District. Subsequent to installation of the approved Grading, Landscape and Irrigation Plans, the applicant shall submit a Certificate of Completion to CDD for review and approval. The Landscape Documentation Package and Certificate of Completion forms are available at the CDD, and are required to be approved by the CDD prior to final inspection. **Monitoring:** CDD shall conduct site visits to ensure installation and maintenance of landscape and irrigation.

17. Sixty-five percent (65%) or more of all construction and demolition debris generated shall be diverted from the landfill, as mandated by Carpinteria Municipal Code. Demolition and/or excess construction materials shall be separated onsite for reuse/recycling or proper disposal (e.g., concrete asphalt). During demolition and grading, separate bins for recycling of construction materials and brush shall be provided onsite. **Plan Requirements:** This requirement shall be printed on demolition plans. Applicant shall report any self-hauled materials to the City or contract with an approved waste hauler for disposal of construction and demolition debris. **Timing:** Materials shall be recycled as necessary throughout demolition and grading activities. All materials shall be recycled prior to occupancy clearance. **Monitoring:** Public Works shall review and approve self-hauled disposal receipts from transfer stations prior to occupancy clearance.

18. To prevent construction and/or employee trash from blowing offsite, covered receptacles shall be provided onsite prior to commencement of grading or construction activities. Waste shall be picked up weekly or more frequently as directed by CDD staff. **Plan Requirements and Timing:** Prior to Building Permit issuance, applicant shall designate and provide to CDD the name and phone number of a contact person to monitor trash/waste and organize a clean-up crew. Trash control shall occur throughout all grading and construction activities. **Monitoring:** CDD shall inspect periodically throughout grading and construction activities.

19. The applicant shall follow the County of Santa Barbara Stormwater Technical Guide to implement Post-Construction Runoff Control Measures (PCRs) to effectively prevent the entry of pollutants from the project site into the storm drain system during and after development. **Plan Requirements**: The applicant shall implement a Storm Water Control Plan (SWCP) that includes the following elements: identification of potential pollutant sources that may affect the quality of the storm water discharges; the proposed design and placement of structural and non-structural PCRs to address identified pollutants; a proposed Operation and Maintenance Plan; a method for ensuring maintenance of all PCRs over the life of the project; and certification by a licensed civil engineer, architect, or landscape architect. The approved measures shall be shown on all building plans. **Timing:** Prior to issuance of a Grading or Building Permit, the SWCP

shall be submitted to Public Works. All measures specified in the plan shall be constructed and operational prior to occupancy clearance. The terms of the Operation and Maintenance Plan shall be followed to maintain facilities. **Monitoring:** Public Works shall site inspect prior to occupancy clearance to ensure measures are constructed in accordance with the approved plan and periodically thereafter to ensure proper maintenance.

20. The recommendations outlined in the project specific preliminary foundation investigation shall be followed in the construction of the subject building and the applicants shall be required to have the project engineering geologist onsite to observe all excavations prior to placement of compacted soil, gravel backfill, or rebar and concrete. **Plan Requirements/Timing:** Two copies of the preliminary foundation investigation shall be submitted with the building plans for building permit plan check. Applicable plan sheets (i.e., grading, foundation, etc.) shall be in substantial compliance with the recommendations outlined in the soils report. The project engineering geologist shall be onsite during excavation, recompacting and foundation preparation work, as applicable. **Monitoring:** Building Inspector shall review and approve building plans and shall site inspect during construction, prior to occupancy clearance.

21. Construction materials and waste such as paint, mortar, concrete slurry, fuels, etc. shall be stored, handled and disposed of in a manner which minimizes the potential for storm water contamination. Proper washout practices shall be followed. **Plan Requirements and Timing:** Bulk storage locations for construction materials and any measures proposed to contain the materials shall be shown on the demolition and grading plans submitted to Public Works for review prior to issuance of a Demolition and Grading Permit. **Monitoring:** Public Works shall site inspect prior to the commencement and as needed during all demolition and grading activities.

22. During construction, washing of concrete trucks, paint, equipment or similar activities shall occur only in areas where polluted water and materials can be contained for subsequent removal from the site. Wash water shall not be discharged to the storm drains, street, drainage ditches, creeks or wetlands. The location of the washout area shall be clearly noted at the construction site with signs. **Plan Requirements:** The applicant shall designate a washout area, acceptable to CDD, and this area shall be shown on the construction and/or grading and building plans. **Timing:** The wash off area shall be designated on all plans prior to issuance of a Grading or Building Permit. The washout area shall be in place and maintained throughout construction. **Monitoring:** CDD shall check plans prior to issuance of a Grading or Building Permit and staff shall site inspect throughout the construction period to ensure proper use and maintenance of the washout area.

23. Compliance with the attached Departmental letters required as follows:

    a. Carpinteria-Summerland Fire Protection District, dated January 17, 2023.

DEVELOPMENT PLAN

24. Approval of the Final Development Plan and Coastal Development Permit shall expire three (3) years after approval by the Planning Commission, unless prior to the expiration date, substantial physical construction has been completed on the development or a time extension has been

applied for by the applicant. The decisionmaker with jurisdiction over the project may, upon good cause shown, grant a time extension.

25. If the applicant requests a time extension for this permit, the permit may be revised to include updated language to standard conditions and/or mitigation measures and additional conditions and/or mitigation measures which reflect changed circumstances or additional identified project impacts. Mitigation fees shall be those in effect at the time of issuance of a Building Permit.

26. Prior to the issuance of any Building Permits, the applicant shall submit final plans to the City for review by the Architectural Review Board. Final plans shall include but not be limited to complete construction drawings and details concerning signing, lighting, colors and exterior materials, landscaping and irrigation.

27. All materials and colors used in construction and all landscape materials shall be as represented to the Architectural Review Board and any deviation will require the express review of the Board.

28. An approval granted by the Planning Commission/City Council does not constitute a Building Permit or authorization to begin any construction. An appropriate permit issued by the Building Division must be obtained prior to constructing, enlarging, moving, converting, or demolishing any building or structure within the City.

29. The conditions of this approval supersede all conflicting notations, specifications, dimensions, and the like which may be shown on submitted plans.

APPEALABLE COASTAL DEVELOPMENT PERMIT

30. If the City determines at a noticed public hearing that the permittee is not in compliance with any conditions of this permit pursuant to the provisions of Section 14. of the Carpinteria Municipal Code, the City may, in addition to revoking the permit pursuant to said section, amend, alter, delete or add conditions to this permit.

31. The applicant's acceptance of this permit and/or commencement of construction and/or operations under this permit shall be deemed acceptance of all conditions of this permit by the permittee.

32. The use and/or construction of the building or structure, authorized by this approval cannot commence until the Coastal Development Permit and necessary Building Permits have been issued. Prior to the issuance of the Coastal Development Permit, all of the project conditions that are required to be satisfied prior to issuance of the Coastal Development Permit must be satisfied.

CITY RULES & REGULATIONS/LEGAL REQUIREMENTS

33. Before using any land or structure, or commencing any work pertaining to the erection, moving, alteration, enlarging, or rebuilding of any building, structure, or improvement, the applicant shall obtain a Building Permit. These Permits are required by ordinance and are necessary to ensure implementation of the conditions required by the Planning Commission. Before any Permit will

be issued by Community Development, the applicant must obtain written clearance from all departments having conditions; such clearance shall indicate that the applicant has satisfied all pre-construction conditions. A form for such clearance is available from Community Development.

34. Any minor changes may be approved by the City Manager and/or Community Development Director. Any major changes will require the filing of a revision application to be considered by the Planning Commission.

35. All requirements of the City of Carpinteria (including but not limited to public improvements as defined in the City of Carpinteria Municipal Code (CMC), Section 15.16.110) and any other applicable requirements of any law or agency of the State and/or any government entity or District shall be met.

36. The standards defined within the City's adopted model Building Codes (UBC; NEC; UMC; UFC; UPC; UHC) relative to the building and occupancy shall apply to this project.

37. Any and all damage or injury to public property resulting from this development, including without limitation, City streets, shall be corrected or result in being repaired and restored to its original or better condition.

38. No building permits shall be issued for this project prior to meeting all required terms and conditions listed herein. When not specified herein, all conditions shall be satisfied prior to issuance of a building permit or prior to occupancy when allowed by the Community Development Director.

39. To allow time for the utility companies to locate and mark their facilities for the contractor, the applicant shall telephone Underground Service Alert (USA) toll free at 1-800-227-2600 a minimum of 48 hours prior to the start of construction. For best response, provide as much notice as possible, up to 10 working days.

40. All applicable final conditions of approval shall be printed in their entirety on applicable pages of grading/construction or building plans submitted to CDD and Public Works. These shall be graphically illustrated where feasible. The approved set of plans shall be retained at the construction site for review by the Building Inspector during the course of construction.

41. Prior to issuance of a Building Permit, the applicant shall provide a signed copy of the Conditions of Approval.

Approved by the Planning Commission on May 1, 2023

I HAVE READ AND UNDERSTOOD, AND I WILL COMPLY WITH

ALL ABOVE STATED CONDITIONS OF THIS PERMIT

_____

Applicant/Property Owner Date

CARPINTERIA~SUMMERLAND FIRE PROTECTION DISTRICT

5775 Carpinteria Ave Carpinteria CA 93013, New 1,500 sqft storage building

Location	34.390434, -119.507614
Status	Planning Completed
Submittal Date:	December 28, 2022
Address/Location:	5775 Carpinteria Ave Carpinteria CA 93013
APN:	001-170-018
Number of stories:	1
Comments:	New 1,500 sqft storage building
Submittal Type:	Planning
Applicant:	City of Carpinteria (Matt Roberts)
Address	5775 Carpinteria Ave Carpinteria CA 93013
Phone Number:	805-755-4449
Email:	mattr@carpinteriaca.gov
Fire Protection Systems Existing or Required	Yes

Planning/Conceptual Design

Date Plan Review Completed:	
Permit Number:	22-2194-DP/CDP/ARB
Planner:	Syndi Souter
Submittal Type:	
Description:	
Plans Checked By:	Michael LoMonaco
Invoiced	N/A

Project Conditions

All work shall be done per current applicable CFC and CSFPD ordinance and standards.

Access and Identification	Application for address changes or additional addresses shall be submitted to CSFPD Fire Prevention Bureau
Water Requirements	A current fire flow form shall be submitted to Carpinteria-Summerland Fire Protection District. Contact the Carpinteria Valley Water District to schedule having the test performed.

Fire Protection Systems	All new buildings and structures shall be protected by an approved automatic fire sprinkler system. , FDCs shall be located within 150' of a fire hydrant capable of providing the required fire flow., Prior to installation plans for the proposed fire sprinkler system shall be designed by a qualified person and submitted to this office for approval., A fire alarm or sprinkler monitoring system shall be installed or modified. Prior to installation plans for the system shall be designed by a qualified person and submitted to this office for approval., Prior to occupancy all alarm systems that are monitored shall be tested., Prior to occupancy portable fire extinguishers shall be mounted such that the maximum travel distance from any area will meet the standard or be less than 75 feet.
Additional Requirements	Any future changes including further division intensification of use or increase in hazard classification may require additional conditions in order to comply with applicable fire district development standards
Fees	I. Industrial/ Manufacturing Uses Development. A fee of $0 .536 per square foot of floor space will be assessed on all new Industrial/ Manufacturing development., PURSUANT to CSFPD Ordinance 2019-01 imposition of fire protection fees for service: The applicant may be required to pay fees for additional plans reviews and/ or additional field inspections. The amount of the fee is as follows: A. Two Hundred Twenty-Four ($224.00) Dollars for Additional Plan Review Fees will be assessed as additional plan reviews are completed. B. Two Hundred Ten ($210.00) Dollars per hour for Field Inspections will be assessed for additional inspections.

Checks shall be made payable to: Carpinteria-Summerland Fire Protection District (CSFPD) and delivered to Fire District Headquarters at 1140 Eugenia Place, Suite A Carpinteria, California 93013. Money orders and cashiers' checks will be accepted. Credit and debit cards can be used online. The link can be found at Carpfire.org Note: Cash payment will not be accepted. PLEASE NOTE: The conditions that are checked apply to this project as currently described. Future changes including, but not limited, to further division intensification of use or increase in hazard classification, may require additional conditions in order to comply with applicable development standards in effect at the time of the change. If you have questions please do not hesitate to contact this office at (805) 684-4591.

CARPINTERIA~SUMMERLAND
FIRE PROTECTION DISTRICT

Inspector's Signature:

Signed 1/17/2023, 7:25:45 AM PST

Exhibit 2
January 26, 2023 ARB Minutes

City Hall Storage Building
20-2194-DP/CDP

May 1, 2023

CITY OF CARPINTERIA
5775 Carpinteria Avenue
Carpinteria California 93013

ARCHITECTURAL REVIEW BOARD
Meeting Date: January 26, 2023

ACTION MINUTES

The meeting was called to order at 5:31 p.m. by Chair Stein.

ROLL CALL

Boardmembers present: Brad Stein, Chair
Amy Blakemore, Vice Chair
Richard Johnson

Boardmembers absent: Patrick O'Connor
Jim Reginato

OTHERS PRESENT: 1 member of the public were in attendance.

PUBLIC COMMENT: None.

PROJECT REVIEW

1) Project: City of Carpinteria Storage Building, Project 22-2194-DP/CDP
Address: 5775 Carpinteria Avenue
Applicant: Matt Roberts, Director of Parks, Recreation, and Public Facilities
Planner: Syndi Souter

Request of Matt Roberts, Director of Parks, Recreation, and Public Facilities, agent for the City of Carpinteria, to consider project 22-2194-DP/CDP for preliminary review of a request to construct a new 1,500 square-foot storage building with a maximum height of 15-feet on the city hall campus. The property is a 4.81-acre parcel zoned Community Facility (CF) and shown as APN 001-170-018, addressed as 5775 Carpinteria Avenue.

No ex parte communications were disclosed.

Staff presented the project and explained that the purpose of the building was to store the City's archive files and other documents. Staff clarified that several trees, including a pepper tree and several fruit trees, would be removed for the project, but that the avocado tree would remain.

Boardmember Johnson inquired about the number of exterior lights on the building, and staff responded there would be five lights and named the locations. He then asked about the wattage, and staff responded the lights would be LEDs. Lastly, he asked about why the area to the west of the existing Public Works building was not considered to be the site for the new building, and staff responded that the area to the west is the Public Works yard where they store the dumpsters and other materials that are unsightly and that should be out of the public view.

Boardmember Stein mentioned Boardmember O'Connor's letter, and asked about the impacts to the parking lot. Staff clarified that the parking areas would remain as-is and that the new building would not change the parking.

Matt Roberts, Parks, Recreation and Facilities Director, added that he chose the building style with the largest roof overhang, which is approximately 2 feet. He added that he thought the existing avocado

tree would screen approximately half the building from Carpinteria Avenue. The Boardmembers requested to see a better aerial view of the project area, so staff provided an aerial and street views from the internet. The Boardmembers determined that the avocado tree would screen a small amount of the building, and that the location would not impact the parking lot. Mr. Roberts continued on to explain the overall plan for the City Hall campus growth in the future, but stressed the urgent need for a storage building now. He added that the current City storage system is inefficient, and that the building would also allow the storage to be more accessible and better organized. Boardmember Johnson asked about the 10-foot plate heights, and Mr. Roberts responded that the taller walls would allow more shelves for storage.

Public Comment:
A comment letter was submitted by Patrick O'Connor prior to the meeting. The letter is briefly summarized below. A copy of the letter is on file with the Community Development Department.

Patrick O'Connor submitted a letter with his comments and concerns about the project because he was unable to attend the meeting and participate in the Board's discussion. His main concerns were the current state of the existing Public Works building and yard area, removal of trees for the project, potential impacts to parking, how the proposed building will relate to the existing Public Works building, and the need to enhance the aesthetics of the building as viewed from Carpinteria Avenue.

Boardmember Discussion:
Boardmember Blakemore began the discussion with comments about the proposed landscaping. She suggested mulch instead of the silver carpet to eliminate irrigation lines and save water. She suggested alternatives for taller plants along the north elevation (Carpinteria Avenue) in addition to the sage. She added that the location of the building would help define the area and screen the Public Works parking lot. Mr. Roberts added that the persimmon tree could be transplanted to provide additional screening.

Boardmember Stein stated that he did not have a problem with the project and that he understood the necessity for the building. He agreed with Boardmember Blakemore's comments about using mulch and planting taller plants and trees to screen the building from Carpinteria Avenue.

Boardmember Johnson suggested a tall, dense, evergreen hedge, perhaps lemonade berry, to screen the building from Carpinteria Avenue. He said the project needs a landscaping plan with a variety of species to soften and screen views from Carpinteria Avenue. He suggested adding some architectural elements to the roof, such as a cupola or roof monitor, to add visual interest to the building. He suggested a wall with materials similar to City Hall could also be constructed for screening.

ACTION: Motion by Boardmember Johnson, seconded by Boardmember Blakemore, to recommend preliminary/final approval to the Planning Commission with the following comments:

- Use a vertical landscaping element or screening element along the north-facing elevation of the building to help soften views of the building;
- Consider the introduction of dormers, cupolas or similar decorative features to the roof to add architectural interest; and
- Final review of the proposed landscape plan by Boardmember Blakemore prior to issuance of building permits.

VOTE: 3-0

Exhibit 3
CEQA Notice of Exemption

City Hall Storage Building
20-2194-DP/CDP

May 1, 2023

Print Form

Notice of Exemption

Appendix E

To: Office of Planning and Research
P.O. Box 3044, Room 113
Sacramento, CA 95812-3044

County Clerk
County of: Santa Barbara
105 East Anapamu Street
Santa Barbara, CA 93101

From: (Public Agency): City of Carpinteria
5775 Carpinteria Avenue
Carpinteria, CA 93013
(Address)

Project Title: City Hall Storage Building

Project Applicant: Matt Roberts, Director of Parks, Recreation, and Public Facilities, City of Carpinteria

Project Location - Specific:
5775 Carpinteria Avenue

Project Location - City: Carpinteria Project Location - County: Santa Barbara

Description of Nature, Purpose and Beneficiaries of Project:
The project entails the construction of a new 1,500 square-foot storage building.

Name of Public Agency Approving Project: City of Carpinteria

Name of Person or Agency Carrying Out Project: Matt Roberts, Director of Parks, Rec., and Public Fac.

Exempt Status: **(check one):**

- ☐ Ministerial (Sec. 21080(b)(1); 15268);
- ☐ Declared Emergency (Sec. 21080(b)(3); 15269(a));
- ☐ Emergency Project (Sec. 21080(b)(4); 15269(b)(c));
- ☒ Categorical Exemption. State type and section number: §15303(e) and §15332
- ☐ Statutory Exemptions. State code number: _____

Reasons why project is exempt:
The project involves the construction of a new accessory building for storage in a location that is consistent with the City's GP/LCP, is within city limits on a project site of no more than five acres substantially surrounded by urban uses and approval of the project would not result in any significant effects relating to traffic, noise, air quality, or water quality and the site can be served by all required utilities and public services.

Lead Agency Contact Person: Syndi Souter, Associate Planner Area Code/Telephone/Extension: (805) 755-4405

If filed by applicant:

1. Attach certified document of exemption finding.
2. Has a Notice of Exemption been filed by the public agency approving the project? ☐ Yes ☐ No

Signature: _____ Date: _____ Title: _____

☒ Signed by Lead Agency ☐ Signed by Applicant

Authority cited: Sections 21083 and 21110, Public Resources Code.
Reference: Sections 21108, 21152, and 21152.1, Public Resources Code.

Date Received for filing at OPR: _____

May 2023

Sun	Monday	Tuesday	Wednesday	Thursday	Friday	Sat
	1 **10am** Admin Services Meeting **CM** **1pm** Review Operating Budget **CM** **5:30pm** Planning Comm. Mtg. **CC TV**	2 **10am** Supervisor's meeting **CC** **1:30pm** PW/Admin EP Meeting **LR** **3:30pm** Monthly Finance Budget **CM**	3 **2pm** PW Staff Meeting **CC** **5:30pm** Fire District Board **CC TV**	4 **8am** DTBAB Meeting **SR** **9am** Discuss COE **CM** **11am** FY Budget Workshop **CC** **2pm** All CDD Staff Meeting **CM** **5:30pm** Parks and Rec. Sport Teams	5 	6
7	8 **8am** Senior Services Committee **CC** **10am** Admin Services Meeting **CM** **3pm** City Council Closed Session **CM** **5:30pm** City Council Mtg. **CC TV**	9 **10am** Supervisor's meeting **CC** **2:30pm** Weekly CDD Staff Mtg. **CM** **4pm** Biweekly HR Meeting **CM** **4:30pm** School Dist. Closed Sess. **SR** **5:30pm** School District Mtg. **CC TV**	10 **2pm** PW Staff Meeting **CC** **5:30pm** Water District. Mtg. **CC TV**	11 **10:30am** Library Staff Meeting **LR** **11am** Inter-Dep. Coordination **CC** **2:30pm** Code Compliance Mtg. **CM** **3:30pm** Finance Budget Meeting **CM** **5:30pm** Architectural Review Board **CC**	12	13 **9am** Carp Beautiful **CC** **9am -1pm** ABOP – PW Yard
14 	15 **8am** PRELIMINARY AUDIT **LR** **10am** Admin Services Meeting **CM** **5:30pm** Special City Council Mtg. **CCTV**	16 **8am** PRELIMINARY AUDIT **LR** **10am** Supervisor's meeting **CC** **2:30pm** Weekly CDD Staff Mtg. **CM**	17 **8am** PRELIMINARY AUDIT **LR** **2pm** PW Staff Meeting **CC**	18 **10:30am** IDAG Mtg. **BR** **1pm** Parks Department Mtg. **SR** **2:30pm** Code Compliance Mtg. **CM** **5:30pm** Tree Advisory Board **CC**	19 **8am** BEACON **CC**	20
21	22 **10am** Admin Services Meeting **CM** **3pm** City Council Closed Session **CM** **5:30pm** City Council Mtg. **CC TV**	23 **10am** Supervisor's meeting **CC** **2:30pm** Weekly CDD Staff Mtg. **CM** **4pm** Biweekly HR Meeting **CM** **4:30pm** School Dist. Closed Sess. **SR** **5:30pm** School District Mtg. **CC TV**	24 **2pm** PW Staff Meeting **CC** **5:30pm** Water District. Mtg. **CC TV**	25 **10am** Collection information **CM** **10:30am** Library Staff Meeting **LR** **2:30pm** Code Comp Mtg. **CM** **3:30pm** Monthly Finance Budget **CM** **5:30pm** Architectural Review **CC**	26	27 **9am -1pm** ABOP – PW Yard
28	29  **CITY HALL CLOSED IN OBSERVANCE OF MEMORIAL DAY**	30 **10am** Supervisor's meeting **CC** **2:30pm** Weekly CDD Staff Mtg. **CM**	31 **2pm** PW Staff Meeting **CC**	**SR** Side Room **CM** Camber Meeting Room **CC TV** Council Chamber Televised **CC** Council Chamber **LR** Lobby Meeting Room		

City of Carpinteria
Planning Activity Summary

April 2023

1. In 30-day review process
2. Incomplete
3. Schedule for ARB
4. Director's Decision
5. Schedule for PC
6. PC approved
7. Schedule for CC
8. CC Approved
9. Schedule for final ARB
10. Final ARB Approval
11. Schedule for CCC
12. In plan check
13. BP issued
14. Under construction
15. C of O issued

Last Edited 04/27/2023

Project #	Owner / Applicant	Address	Street	Project Description	Activity	Planner	Status	Code Violation
23-222-TUP	St Joseph Church	1532	Linden Avenue	Annual festival	Submitted 4/6/2023. Under review.	Marysol	1	
23-2221-DP/CDP	Justin Klentner	4745	Carpinteria Ave	Mixed Use development: 24 apartments & 4,304 sq. ft. commercial space. Applying State Density Bonus provisions.	Submitted 4/14/23. Under review.	Nick	1	
23-2220-CDP/ADU	Richard Heimberg	4854	Eighth Street	Convert attached 1-car garage and game room to a 627sf ADU	Submitted 4/12/2023. Under review.	Syndi	1	
23-2219-CDP/ADU	Dario Pini	990	Concha Loma Drive	Convert 457sf attached storage room to an ADU	Submitted 4/7/2023. Under review.	Syndi	1	
23-2218-ARB/CDP	Joseph Cardenas	5401	Cameo Road	New 587 sf 2nd story addition, 460 sf garage converstion, new 587 sf garage.	Submitted 4/4/2023. Under review.	Marysol	1	
23-2217-CUPR	AT&T Wireless	850	Linden (adj)	AT&T small cell wireless facility co-located on an SCE streetlight pole within the public right-of-way.	Submitted 3/24/2023. Under review.	Nick	1	
23-2216-CUPR	AT&T Wireless	323	Elm Avenue (adj)	AT&T small cell wireless facility co-located on an SCE streetlight pole within the public right-of-way.	Submitted 3/24/2023. Under review.	Nick	1	
23-2215-SIGN	Neon Plus Signs / Fancy Floors	1015	Casitas Pass Road	1 wall electric channel letter sign and 1 hanging sign	Submitted 3/23/2023. Incomplete. Resubmittal 4/26/2022. Under review.	Marysol	1	
23-2209-CDP/ARB	Mark & Megan Pfaff	5559	Calle Arena	New 2,631 sf 2-story SFD with a 401sf attached 2-car garage.	Submitted 2/8/2023. Incomplete 3/10/2023. Resubmittal 4/13/2023.	Syndi	1	
23-2207-DP/LCPA/TPM/CDP	Carp Bluff, LLC	5669 &5885	Carpinteria Avenue	New 99-room resort and 41-unit apartment building.	Submitted 2/3/2023. Incomplete 3/3/2023.	Syndi	2	
23-2200-CUP/CDP	Patrick O'Connor	5395	Eighth Street	New driveway & garage remodel.	Submitted 1/18/23. Incomplete 2/17/23.	Nick	2	
22-2183-ARB/CDP	Tyler Mayer	5557	Calle Arena	Addition to SFD	Submitted 9/12/2022. On hold pending project redesign. Resubmittal 12/14/2022. Incomplete 1/11/2023.	Syndi	2	
22-2175-DP/CDP	Tim Finnigan / Saticoy Development LLC	4253	Carpinteria Ave	Construct 3 new units	Submitted 8/8/22. Incomplete 9/7/22.	Nick	2	
22-2164-DPR/CDP	Parga Construction for The Spot	389	Linden Avenue	Patio Cover over steel structure and canvas shades	Submitted 6/23/2022. Incomplete 7/21/22. Resubmittal 12/22/2022. Incomplete 1/19/2023. ARB 3/16/2023. Pending resusubmittal in response to comments.	Marysol	2	
22-2145-ARB/CDP	Heather & Sean Findley	864	Arbol Verde Street	Garage conversion to living space and 567sf addition with new garage and foyer.	Submitted 3/15/2022. Incomplete 4/14/2022. On hold pending ADU ordinance.	Syndi	2	

21-2099-CUP	Family Baptist Church	5026	Foothill Road	New portable classrooms for elementary school	Submitted 3/15/2021. Incomplete 4/13/2021. Resubmitted 5/26/2021. Incomplete 6/24/2021. Prelim ARB 6/17/2021, continued to 7/1/2021 with comments. Project on hold per applicants.	Marysol	2	
20-2073-SIGN	Ramiro Vega	830	Maple Avenue	New illuminated sign (as-built)	Submitted 11/6/2020. Incomplete 12/3/2020. Pending resubmittal.	Marysol	2	yes
20-2067-DP/CUP/CDP	Jens Amlie	845	Concha Loma Drive	460 sf master bedroom addition to (e) SFD	Submitted 10/1/2020. Incomplete 10/30/2020. Resubmitted 8/16/2022. Incomplete #2 9/15/2022.	Syndi	2	
20-2047-DP/CDP	Chevron	5663	Carpinteria Ave	Seal rookery overlook improvements	Submitted 3/26/2020. Under review. Incomplete 4/23/2020. Awaiting resubmittal.	Syndi	2	
20-2045-LM	Rafael Hernandez	4950 & 4954	Fifth Street	Voluntary lot merger	Submitted 3/11/2020. Sent to City Surveyor for review 3/23/2020. 1st corrections received & sent to applicant 4/9/2020.	Syndi	2	
20-2033-SIGN	Yummy Yogurt	1005	Casitas Pass Road	New sign	Submitted 2/7/2020. Incomplete 3/6/2020. Resubmitted 4/10/2020. Under review. Pending resubmittal.	Marysol	2	Yes
20-2030-CUP	Procore	6395 B&C	Cindy Lane	Convert 2 warehouse buildings to a business training center. Total square footage is 60,522 sf, and includes a new kitchen and mezzanine	Submitted 1/8/2020. Incomplete 2/7/2020. Awaiting resubmittal.	Syndi	2	
19-2018-FENCE	Ernesto Verburgt	4516	El Carro Lane	7 foot side yard fence (resulting from grade difference)	Submitted 10/25/2019. Incomplete. Partial resubmittal 12/10/2019. Building Permit in plan check. Awaiting solution for last incompleteness item.	Marysol	2	Yes
18-1954-DPR/CDP	Winfred Van Wingerden	4180	Via Real	New gazebo, paint colors, and landscaping	Submitted 12/27/18. Incomplete 1/25/19. Resubmitted 2/11/19; under review. Revised scope; complete 3/7/19. Revised scope, resubmitted materials 4/19/19. Roy H. advised applicant new gazebo triggers ADA issues.	Syndi	2	Yes
15-1783-SIGN/FENCE	Arbor Trailer Park	4677	Carpinteria Avenue (Ninth Street)	New frontage fences and signage	Submitted 08/05/15. Need survey from PW. Incomplete 08/17/15. See Matt M for PW status.	Marysol	2	
23-2199-CON	Brandon Bono	4788 & 4792	Dorrance Way	Remodel and 354sf 2nd-story addition to duplex	Submitted 1/18/2023. Tentatively scheduled for ARB on 4/27/2023.	Syndi	3	
22-2195-ARB/CDP	Laura Mickelson	5518	Calle Arena	New 344sf addition to SFD & 300sf accessory structure	Submitted 12/27/2022. Incomplete 1/26/2023. Resubmittal 2/15/2023. Complete 3/17/2023. Tentatively scheduled for ARB on 5/11/2023.	Syndi	3	

22-2191-CDP/ARB	Richard and Lisa Shattuck	5631	Canalino Drive	Remodel and 429 square foot addition.	Submitted 10/31/2022. Incomplete 11/29/2022. Resubmittal 12/21/2022. Incomplete 01/18/2023. Resubmittal 3/21/2023. Complete 04/17/2023. Scheduled for preliminary ARB review 04/27/2023.	Marysol	3	
22-2184-DP/CDP/ARB	Gregg & Beth Scerni	4610	Fourth Street	New 2,257sf 2-story SFD with 504sf detached 2-car garage	Submitted 9/13/2022. Incomplete 10/13/2022. Resubmittal 3/6/2023. Complete 3/21/2023. Tentatively scheduled for ARB on 4/27/2023.	Syndi	3	
22-2182-ARB/CDP	Mark Rolph	4715	Aragon Drive	1,375sf two-story addition to (e) SFD	Submitted 9/6/2022. Incomplete 10/6/2022. Resubmittal 11/6/2022. 2nd Incomplete 12/7/2022. Resubmittal 12/12/2022. Complete 1/3/2023. Prelim review at ARB on 2/16/2023. Awaiting revised plans.	Syndi	3	
22-2168-DP/CDP	Sandpiper MHP	3950	Via Real	Phase 2-new solar canopies in side yard setback.	Submitted 7/13/2022. Incomplete 8/11/2022. Resubmitted 8/31/2022. Complete 9/28/2022. To ARB for Preliminary review on 10/27/2022. Awaiting revised plans.	Syndi	3	
22-2167-ARB	Sandpiper MHP	3950	Via Real	Phase 1-new solar canopies over parking & common open space area.	Submitted 7/13/2022. Incomplete 8/11/2022. Resubmitted 8/31/2022. Complete 9/28/2022. To ARB for Preliminary review on 10/27/2022. Awaiting revised plans.	Syndi	3	
22-2162-DP/CDP/ARB	John Howard	4818	Dorrance Way	New 1,895sf 2-story SFD and a detached 471sf garage with a 408sf workshop above.	Submitted 6/9/2022. Incomplete 7/8/2022. Resubmitted 9/8/2022. 2nd Incomplete 10/3/2022. Resubmittal 12/7/2022. Complete 12/28/2022. To ARB on 3/16/2023. Awaiting revised plans.	Syndi	3	
21-2128-DP/CDP	Chevron	5675	Carpinteria Avenue	Decommissioning and Remediation of the Carpinteria Oil and Gas Processing Facilities	Submitted 10/25/2021. Labels Submitted 11/10/21. Complete 3/8/22. NOP Issued 8/1/2022. IS comment period extended to 9/30/2022. Draft EIR underway.	Steve/Luis	3	
19-2006-CON	Richard Smith	5510	Callejon Dr	Remodel (E) SFD, construct 2nd story addition, & addition of ADU	Submitted 9/6/19. ARB concept review 11/21/19. Revised ARB concept review 8/27/20.	Nick	3	
18-1942-DP/CDP	Carp Unified School Dist.	5201	Eighth Street	Replace portables with Modulars	Submitted 10/15/2018. Incomplete 11/14/18. Resubmitted 3/6/19, Complete 4/4/19. Waiting for requested materials for ARB.	Steve	3	
23-2213-CDP/ADU	John & Koreen Pagano	1286	Casitas Pass Road	Convert 489sf detached family room to an ADU	Submitted 3/15/2023. Approved 3/31/2023.	Syndi	4	
23-2211-SIGN	Pro Deo Foundation / Coastland	5036	Carpinteria Avenue	New retail signs	Submitted 3/3/2023. Approved 3/30/2023.	Marysol	4	

23-2206-DPR/CDP	Randy Jones	5217	Cambridge Lane	Demo 123sf sunroom and add 148sf bedroom addition	Submitted 1/31/2023. Incomplete 2/28/2023. Resubmittal 3/20/2023. Approved 4/26/2023.	Syndi	4	
22-2185-CDP	City of Carpinteria		Poplar Street & 5800 block Via Real	Via Real Stormwater Project	Submitted 9/16/22. Incomplete 10/7/22. Complete 12/1/22. Director Approved 3/03/23.	Nick	4	
22-2170-SIGN	City of Carpinteria	5781	Carpinteria Avenue	New ground sign for the skate park	Submitted 7//2022. Director approval 8/2/2022.	Marysol	4	
21-2116-ARB	Motel 6	5550	Carpinteria Avenue	Lighting and landscaping	Submitted 7/14/2021. Incomplete 8/12/2021. Resubmitted 11/10/2021. Incomplete 12/9/2021. Resubmittal 12/20/2021. Incomplete 1/19/2022. Pending Resubmittal. ARB 4/28/2022. Director approved 7/5/22. Coastal Commission Appeal period ends 8/4/2022. Property ownership has changed. New property owner has been informed on next steps to clear violation 04/25/2023.	Marysol	4	Yes
21-2112-LCPA	City of Carpinteria		City wide	Downtown Design Overlay Program	RRM Drafting DDO amendments. Edits and comments to Ch 14 resubmitted to RRM.	Steve	4	
21-2111-LCPA	City of Carpinteria		City wide	Density Bonus Program	In progress. Public Draft in preparation.	Steve	4	
19-1986-LCPA	City of Carpinteria		Citywide	Development Design and Housing Regulation Changes	See 21-2112 for Downtown Overlay.	Steve	4	
18-1935-ARB	Gerardo Celio	1466	Azalea Drive	Demo of structures, new California roof over flat roof garage, addition of 181 sf	Submitted 08/30/2018. Incomplete 9/28/2018. ARB 10/11/2018. Pending resubmittal. Resubmitted 05/14/2019. Complete 06/13/2019. Resubmittal 10/14/2019. Pending another resubmittal for Director-level final review. BP submitted for demo of unpermitted construction only.	Marysol	4	
22-2194-DP/CDP	City of Carpinteria	5775	Carpinteria Avenue	New 1,500sf storage building	Submitted 10/12/2022. Incomplete 11/9/2022. Resubmittal 11/29/2022. Complete 12/28/2022. To ARB for prelim/final on 1/26/2023. Tentatively scheduled for PC on 5/1/2023.	Syndi	5	
21-2131-DP/CDP/ARB	Tim Finnigan	4775	Seventh Street	New SFD with 4-car garage below	Submitted 11/8/2021. Incomplete 12/8/2021. Resubmittal 3/18/2022. Incomplete #2 4/14/2022. Resubmittal 4/25/2022. Incomplete #3 5/24/2022. Resubmittal 6/7/2022. Complete 7/6/2022. To ARB for Preliminary review on 9/15/2022. Awaiting revised plans.	Syndi	5	
16-1810-LCPA	City of Carpinteria		Citywide	General Plan/Coastal Land Use Plan Update	kick off meeting April 27, 2016. Ongoing through 2024.	Steve	5	

05-1210-ZTA/LCPA	City of Carpinteria		Citywide	Zoning Code Update	Kick-off meeting 4/20/05. Joint Study Session 5/16/05. All administrative draft chapters delivered 5/12/06. Ongoing through 2024.	Steve	5	
22-2147-DP/CDP	City of Carpinteria		Linden to Holly	Interim Coastal Vista Trail Spur	Submitted 3/28/2022. Complete 4/27/2022. Prelim ARB approved 5/26/2022. PC approved 7/5/2022.	Syndi	6	
22-2140-CUP	Carpinteria Valley Water District	5300	El Carro (El Carro Park)	New groundwater wells	Submitted 1/18/2022. Incomplete 2/9/22. CC granted City Manager authorization to sign application 6/27/22. Resubmittal 8/2/22. GC 65402 Determination to PC 9/6/22. PC approved 1/3/23.	Nick	6	
21-2083-DP/TPM/CDP/ARB	Jerry & Lisa Zins	4905	Eighth Street	New condominium triplex	Submitted 1/13/2021. Incomplete 2/12/2021. Owners have decided to do condos instead of apts. Resubmitted 9/17/2021. 2nd Incomplete 10/11/2021. Revised duplex apt. project submitted 2/4/2022. Complete 3/7/2022. To ARB for prelim 4/28/2022. Revised plans for 3 condos submitted 6/27/2022. Revised plans submitted 8/30/2022. To ARB for cont'd prelim review on 9/15/2022. Revised plans submitted 11/15/2022. Approved by PC on 2/6/2023.	Syndi	6	
20-2072-CUP/CDP	Ben Paul	4652	Fourth Street	Exterior and interior remodel of two existing detached dwelling (as-built).	Submitted 10/20/2020. Incomplete 11/19/2020. Resubmittal 01/08/2021. Prelim/Final ARB 01/14/2021. Incomplete 2/4/2021. Resubmittal 3/8/2021. Complete 3/25/2021. Planning Commission 6/7/2021. Approved. Pending Building Permit submittal.	Marysol	6	yes

18-1926-DP/CDP	Steadfast Grand Vida II	5464	Carpinteria Ave	Phase II Assisted Living Facility expansion	Submitted 7/12/18. Incomplete 8/10/18. Resubmitted 1/28/19; incomplete 3/7/19. Resubmitted 3/21/19; incomplete 4/18/19. Resubmitted 6/11/19; complete 7/11/19. To prelim ARB 10/17/19; continued to ARB 12/12/19. Prelim ARB approval 12/12/19. To PC 1/6/2020-approved. To ARB for in-progress review 1/30/2020. TEX requested 5/26/2020. TEX approved by PC on 8/3/2020. Approval expires 1/16/2024. 2nd COVID-19 TEX extends expiration date to 1/16/2025.	Syndi	6	
16-1822-DP/CDP	Via Real Hotel	4110	Via Real	New 110-room hotel	Submitted 4-19-16. Incomplete 5-18-16. Resubmittal 7/14/16. Incomplete 8/11/16. Resubmittal 9-12-16. Incomplete 10/11/16. Resubmitted 10/31/16. Complete 11/30/16. Prelim ARB 12/15/16, cont'd to future meeting. In-progress ARB review 2/16/17. Prelim ARB approval 3/30/17. Env. review underway. Reviewed updated biological/wetland reports; CCC determined creek regulations apply. Site visit w/ CCC 6/8. Revised project submitted 7/24/19; under review. Revised preliminary ARB review 8/29/19; continued to 11/21/19 ARB meeting. Revised prelim ARB approval 11/21/19. Draft MND released for 30-day public comment period 10/15/22. ERC recommended approval of MND 11/1/22 to PC. Proposed Final MND underway. PC approved 4/3/23. CCC appeal period ends 5/2/23.	Nick	6	
15-1781-DP/CDP	Bernardo Cruz	4675	Carpinteria Ave	Construct (N) 2-story mixed use building	Submitted 07/09/2015. Incomplete 8/06/15. Concept ARB review 03/29/20. Resubmittal 07/22/20. Incomplete 8/21/20. Resubmitted 2/8/21. Incomplete 3/8/21. Resubmitted 5/17/21. Prelim ARB Approved 9/16/21. PC approved 2/6/23.	Nick	6	
14-1722-TPM/CDP	Godfrey	1056	Eugenia Place	Subdivide (e) mixed use building into three condominiums	Submitted 6/19/14. Incomplete 7/17/14. Resubmitted 10/20/14. Complete 10/29/14. PC approved 11/3/14. FLAN sent 11/18/14.	Nick	6	
22-2171-ORD	City of Carpinteria		Downtown T	Parklet Permit Program	Reviewed by ARB 7/28/22. PC approved 12/5/22. To CC 4/24/23.	Nick	7	

19-2015-CUP/CDP	City of Carpinteria		Carpinteria Ave	Construct Carpinteria Rincon Trail	Submitted 10/17/19. AB52 Notification 10/29/19. Release of public draft MND 11/1/19. To ERC 11/14/19. PC acceptance & certification of MND 1/6/20. Appeal of PC filed 1/15/20. Appeal set aside. NOP Released for EIR 10/30/20. NOP Scoping Hearing 11/17/20. NOP Scoping Period closed 11/30/20. Draft EIR released for 45-day review period 3/12/21. To ERC 4/13/21. DEIR commented period ended 4/26/21. ARB Prelim Approval 10/28/21. Proposed Final EIR published 1/3/22. PC approved 1/18/22. Appeals filed 1/28/22. City Council conceptually upheld appeals 3/28/22. Stakeholder outreach underway. Back to Council May 15.	Nick	7	
19-1982-MCA	City of Carpinteria		Citywide	Seismic Retrofitting of Soft-Story Buildings	Initiated by the City Council on 5/13/19. To City Council for first read on 1/13/2020. Public Workshop held 2/22/2020. Second first read yet to be scheduled summer 2023.	Dan / Steve	7	
22-2157-GPA	City of Carpinteria		Citywide	Housing Element Update	Kick off Meeting June 6, 2022. Discussion of strategies at PC 8/1/2022. Adopted by City Council on 4/10/23. Sent to HCD for Certification on 4/12/23.	Steve	8	
20-2057-DP/CUP/CDP	Martha Marquez	4684	Seventh Street	Construct a 258 SF addition and new entry porch to Unit A on the existing duplex.	Submitted 7/22/2020. Incomplete 8/21/2020. Resubmittal 3/23/2021. Incomplete 4/21/2021. Resubmittal 3/16/2022. Complete 4/15/2022. To ARB for preliminary review on 5/26/2022. Approved by PC on 12/5/2022. Tentatively scheduled for final ARB on 4/27/2023.	Syndi	9	
17-1883-DP/CDP/TPM	Michael Haber	4716	Seventh St	remodel (E) SFD, construct carport, construct 2 (N) 2-story residential units, subdivide property for condominium purposes.	Submitted 6/22/17. Incomplete 7/20. Resubmitted 10/2/17. Incomplete 11/1/17. Resubmitted 1/11/18, under review. Prelim ARB approval 3/15/18. PC approved 6/4/18. FLAN sent to CCC 06/21/18. Submitted for Final ARB 11/20/20. Awaiting revised drawings. Final Parcel Map submitted for review 2/1/21. In BP plan check. 24-mo. time extensionapproved by PC 12/5/22.	Nick	9	

19-1980-ARB	Stengel	5420	Cameo	Remodel SFD & 1st floor addition	Submitted 4/19/19. Comments back to applicant 5/13/19. Complete 5/22/19. Prelim ARB approval 6/13/19. Director approved 7/30/19. Final ARB approval 9/26/19. Applicant submitted Time Extension Request granted 12/11/20.	Nick	10	
14-1719-CUP/CDP	City of Carpinteria		Carpinteria Ave Bridge	Replace Carpinteria Ave Bridge over Carpinteria Creek	NOP & Scoping Document released 7/3/14. Scoping Hearing 7/22/14. Project overview to PC 9/2/14. Project update to CC 11/10/14. ARB CON 2/12/15. EIR released for public comment 3/25/16. ERC 4-26-16. Public Comment Period closed 5-9-16. Prelim ARB approval 9/15/16. PC approved 11/7/16. Sent to CCC 11/18/16. PW completing 65% drawings 3/17. Utility relocation coordination underway 3/17. Construction easement acquisition underway Spring 2018. Entitlements expired, need CEQA Addendum to address CSD Siphon relocation. Final ARB 11/21/19. PC approval for reauthorization of CUP/CDP and acceptance of CEQA Addendum 6/01/20.	Nick	10	
22-2151-LCPA	City of Carpinteria		Citywide	Formula Business Regulations	First presentation at City Council February 14, 2022, CC meetings 5/9/2022, 5/23/2022. Urgency Ordinance adopted 6/27/2022. Initiation at CC 7/11/2022. Approved by CC on 2/13/2023. Transmitted to CCC on 4/19/2023. Moritorium Extension to CC on 5/8/2023.	Steve	11	
17-1896-LCPA/ORD	City of Carpinteria			Citywide commercial cannabis regulations	12/11/17 briefing to CC. 1/22/18 briefing to CC. 4/23/18 CC initiates Ord development. PC 10/1/18 cont'd. 11/5/18 PC recommended approval to CC. CC approved 1st reading 11/26/18. CCC Approved LCPA 2/7/19. Ordinance 2nd reading approved by CC 3/25/19. Consultant contract for licensing program awarded by CC 4/08/19. CCC acceptance of LCPA 5/9/19. Drafting of Licensing program underway.	Nick	11	

23-2214-CDP/ADU	David Pinkernell	5556	Calle Ocho	Convert 580sf detached garage to a 390sf ADU and a 190 sf garage	Submitted 3/20/2023. Approved 4/18/2023. BP#13970 submitted 4/26/2023.	Syndi	12	
23-2212-CDP/ADU	Colleen Albert	1387	Vallecito Place	Convert 304sf detached garage to an ADU	Submitted 3/6/2023. Approved 3/31/2023. BP#13969 submitted 4/25/2023.	Syndi	12	
22-2192-CUPR/CDP	Dish Wireless	4558	Carpinteria Ave	(N) wireless communications facility collocation	Submitted 10/24/22. Incomplete 11/17/22. Resubmitted 12/16/22. Complete 1/04/23. Director Approved 1/09/23. BP submitted 1/20/23.	Nick	12	
22-2172-ARB/CDP	Flourish Trust	5637	Calle Pacific	New swimming pool & shade trellis.	Submitted 7/20/2022. Incomplete 8/19/2022. Resubmitted 8/24/2022. Complete 9/8/2022. To ARB for Preliminary review 9/29/2022. Resubmittal 11/9/2022. Final ARB review on 12/15/2022. Resubmittal 2/8/2023. Director approval 3/21/2023. BP#13895 in plan check.	Syndi	12	
22-2159-ARB/CDP	Greg Lee	501	Concha Loma Drive	New 497sf garage, 97sf addition, interior remodel, and demo (e) 323sf carport.	Submitted 5/26/2022. Incomplete 6/23/2022. Resubmittal 7/8/2022. Complete 7/27/2022. To ARB for Preliminary review on 9/15/2022. Resubmittal 12/19/2022. Final ARB review on 3/16/2023. Revised plans received 3/20/2023. Approved 4/17/2023. BP#13859 in plan check.	Syndi	12	
21-2138-DPR/CDP	Santa Cruz Island Foundation	4994	Carpinteria Ave	Exterior site & building improvements for new Channel Islands Center	Submitted 12/22/21. Routed 1/7/22. Under review. Incomplete 1/21/22. Resubmitted 3/17/22, under review. Preliminary ARB approval 5/26/22. PC approved 8/1/22. FLAN sent 8/15/22. Final ARB approved 8/25/22. Building Permit issued for re-painting & signage. Exterior Improvements building permit under review.	Nick	12	
21-2129-DPR/CDP	The Storage Place	6250	Via Real	New storage units (modular)	Submitted 10/27/2021. Incomplete 11/24/2021. Resubmitted 12/10/2021. Complete 1/4/2022. PC 3/7/2022. Building Permit in plan check. Plan check on hold at applicant's request.	Marysol	12	

21-2079-ARB	Lynette & Jason Fernandes	1330	Vallecito Place	New entry porch, exterior updates, & interior remodel	Submitted 1/8/2021. Incomplete 2/5/2021. Resubmittal 2/19/2021. Complete 3/18/2021. To ARB for prelim/final 3/25/2021. Director approval 11/10/2021. 1-year TEX approved 7/28/2022; now expires 11/10/2023. BP#13946 submitted 4/4/2023.	Syndi	12	
18-1903-DP/CDP	Procore	6303	Carpinteria Ave	Renovation of exterior building facade, landscape and driveway/parking lot	Submitted 1/16/18. Incomplete 02/14/2018. Resubmitted 08/15/2018. Incomplete 9/14/2018. Concept ARB review 10/11/18. Continued Conceptual ARB review 11/15/2018. Complete 01/11/2018. Prelim ARB 02/13/2019. PC 07/01/2019. Final ARB 9/12/2019. In plan check, pending resubmittal. Proposal to proceed with partial relandscaping only under review. Project on hold at applicant's request.	Marysol	12	
15-1788-CDP	Gobbell	5398	Star Pine Road	Convert (E) accessory building into a second dwelling unit	Submitted 8/19/15. Incomplete 9/4/15. Resubmittal 9/11/15. Complete 9/28/15. Prelim/Final ARB 10/15/15. CDD Director approved 10/29/15. 1-year time extension approved 10/11/16. Submitted for Building Permits 10/4/17. In Plan Check.	Nick	12	
07-1407-ARB	6380 Via Real, LLC	6380	Via Real	Revised new office complex	Revised Final ARB 10/17/2019. BP #13512 submitted 12/14/2021. On hold pending project re-design.	Syndi	12	
22-2158-DPR/CDP	Joe & Kimberlee Franken	4745	Dorrance Way	420sf bedroom and bathroom addition, new mud room and closet in garage.	Submitted 5/24/2022. Incomplete 6/22/2022. Resubmitted 6/30/2022. Complete 7/12/2022. Director approval 7/27/2022. BP#13741 issued 1/20/2023.	Syndi	13	
22-2150-SIGN	US Bank	5420	Carpinteria Avenue	New signs	Submitted 4/27/2022. Incomplete. Resubmittal 09/30/2022. Complete 1/24/2023. Director Approved 1/26/2023. Building Permit in plan check. BP issued 2/1/2023.	Marysol	13	
22-2142-SIGN	John Crispis for Albertsons	1018	Casitas Pass Road	New illuminated wall sign and parking lot signs	Submitted 1/20/2022. Incomplete. Resubmittal 12/1/2022. Complete. Director approved 1/2023. Building Permit issued 1/23/2023.	Marysol	13	

21-2107-CUP/CDP/ARB	City of Carpinteria/S&S Seeds	6155	Carpinteria Avenue	Coastal Vista Trail Segment	Submitted 4/28/2021. Incomplete 5/27/2021. Resubmitted 12/28/2021. Complete 1/13/2022. Prelim/Final review at ARB on 3/31/2022. Approved by PC 5/2/2022. CCC appeal period ended 5/31/2022. Demo permit BP#13860 issued 1/9/2023.	Syndi	13	
21-2100-FENCE	Bruce Fincher	4759	Sandyland Rd	Rolling driveway security gate	Submitted 4/5/2021. Incomplete 4/29/2021. Complete 6/2/2021. Prelim ARB 6/17/2021. Under review with Public Works. Redesign and resubmittal under review. ARB Matters by Staff 5/26/2022. Director's review 6/20/2022. Building Permit issued.	Marysol	13	
21-2094-DPR/CDP	Carpinteria Valley Historical Society	956	Maple Avenue	Construct new storage shed	Submitted 3/2/2021. Incomplete 4/1/21. Resubmitted 6/4/21. Complete 7/26/21. Director approved 7/29/21. FLAN sent 8/31/21. BP submitted 9/17/21. BP issued 12/16/21.	Nick	13	
20-2037-ARB/CDP	John Cervini	5586	Retorno Dr	Remodel (E) SFD & construct 2nd story addition	Submitted 2/21/20. Incomplete 3/20/2020. Resubmittal 9/29/2020. Incomplete #2 10/27/2020. Resubmittal 11/12/2020. Complete 12/3/2020. Prelim ARB on 2/11/2021. Director approval 5/5/2021. No appeals filed. Final ARB on 7/29/2021. BP#13393 issued 8/18/2022.	Syndi	13	
19-1985-ARB	Brian Pera, HLW for Procore	6303	Carpinteria Ave	Renovation of exterior facade of an existing 1,315 accessory structure	Submitted 5/15/2019. Complete 6/12/2019. Substantial Conformity Determination 8/1/2019. Building Permit Application submitted 9/4/2019. BP issued.	Marysol	13	
17-1894-DP/CDP	M3 Multifamily, LLC	4819	Carpinteria Avenue	construct new 2-story mixed use building	Submitted 11/30/17. Incomplete 12/19/17. Resubmitted 2/22/18. Complete 2/23/28. PC approved 4/2/18. BP issued 2/19. PC approved 36-mo. Time Extension 5/4/20.	Nick	13	
22-2187-SIGN	West Coast Signs for Channel Islands Center	4994	Carpinteria Ave	(2) non-illuminated wall signs, individual letters	Submitted 10/06/2022. Approved 10/13/2022. Building Permit 10/27/2022. Under construction.	Marysol	14	
22-2186-ARB	Craig Schrager & Christina Murphy	4921	Third Street	Exterior alterations to SFD	Submitted 9/29/2022. To ARB as Matters by Staff 10/27/2022. Incomplete 10/28/2022. Resubmittal 11/14/2022. Under review. Approved 12/20/2022. BP#13831 issued 1/26/2023.	Syndi	14	

22-2180-SIGN	Goleta Signs for Lao Thai Restaurant	1017	Casitas Pass Road	Wall sign and hanging sign	Submitted 8/30/2022. Approved 9/13/2022. Building Permit submitted and approved 9/26/2022. Under construction, pending inspection.	Marysol	14	
22-2169-SIGN	Carp Moon Café	4991	Carpinteria Avenue	New signs	Under review. Incomplete. Approved 8/25/2022. Building Permit issued 9/13/2022. Under construction, pending inspections,	Marysol	14	
22-2163-SIGN	City of Carpinteria	5141	Carpinteria Ave	New ground sign for the Carpinteria Community Library	Submitted 6/10/2022. Approved. Building Permit issued	Marysol	14	
22-2161-SIGN	Ben Mascari / Carpinteria	873	Linden Avenue	Redesign and reinstall previous hanging sign	Submitted 6/1/2022. Approved. Pending inspection.	Marysol	14	
22-2152-SIGN	Reese Corp Signs / Carp Physio	5432-34	Carpinteria Avenue	New signage	Under review. Complete. Director approved 6/28/2022. Building permit issued, pending inspections. Building Permit expired.	Marysol	14	
22-2143-DPR	Bega	1000	Bega Way	Energy storage system & sound wall	Submitted 2/7/2022. Complete 3/8/2022. Approved 4/5/2022. Building Permits issued 7/2022 (Phase 1 and 2). Phase 1 signed off. Pending Phase 2.	Marysol	14	
21-2132-TUP	Gigavac	6382	Rose Lane	TUP for portable offices during remodel	Submitted 11/9/21. Approved 12/16/21. BP submitted 1/31/22. BP issued.	Nick	14	
21-2127-ARB/CDP	Eva Sobesky & Todd Mathers	5353	Eighth Street	Exterior alterations to existing residence.	Submitted 10/25/2021. Incomplete 11/24/2021. Stop Work posted 11/30/2021. Complete 12/6/2021. Prelim ARB 12/16/2021. Final ARB 3/3/2022. Director approval 3/10/2022. BP#13557 issued 6/3/2022.	Syndi	14	
21-2126-FENCE/ARB	Jaime & Ericka Lopez	5458	Granada Way	As-built walls in front and side yards	Submitted 9/27/2021. Incomplete 10/20/2021. Resubmittal 2/8/2022. Incomplete #2 3/10/2022. Resubmittal 5/11/2022. Complete 6/10/2022. ARB approved 6/30/2022. Approved 12/20/2022. BP#13845 issued 3/3/2023.	Syndi	14	Yes
21-2123-CUPR	McCann Mini-Storage	1222	Cravens Lane	Interior mezzanine to add 13,000 sf of storage units to existing 13,000 sf building.	Submitted 8/11/2021. Incomplete 9/9/2021. Resubmitted 11/18/2021. Complete 11/23/2021. Approved by PC on 2/7/2022. BP#13374 issued 7/8/2022.	Syndi	14	

21-2122-CUP/CDP	Caltrans		US 101/Carpinteria Avenue	Santa Claus Ln Bike Path	Submitted 8/12/31. Additional submittals 9/20/21. Complete 9/27/21. Prelim ARB approved 11/10/21. PC approved 12/6/21. CCC appeal period ended 1/10/22, no appeals filed. CDP issued 8/25/22; construction underway 9/1/22.	Nick	14	
21-2121-FENCE/ARB/CDP	St. Joseph Catholic Church	1532	Linden Avenue	New perimeter fence and landscaping around playing field and school.	Submitted 8/9/2021. Incomplete 9/8/2021. Resubmittal 9/23/2021. Complete 10/12/2021. Preliminary & final review at ARB on 10/28/2021. Director approval 11/18/2021. BP #13491 issued 12/15/2021.	Syndi	14	
21-2119-SIGN	Jaime Leaf, Signature Signs	957	Maple #2	Monument sign reface	Submitted 7/19/2021. Approved 8/17/2021. Under construction.	Marysol	14	
21-2106-DP/CDP/ARB	Siegel Residence Addition	4755	Fourth Street	Second story addition to SFD	Submitted 4/28/2021. Incomplete 5/28/2021. Resubmitted 8/30/2021. Complete 10/14/2021. Prelim ARB on 12/16/2021. Approved by PC on 3/7/2022. BP submitted 4/5/2022. Final ARB on 4/28/2022. BP#13599 issued 8/5/2022.	Syndi	14	
21-2101-SIGN	Nhan Nguyen, Lavish Nails	991	Linden Ave	1 non-illuminated wall sign	Submitted 4/9/2021. Incomplete 5/5/2021. Resubmittals, pending corrections. Approved 8/17/2021. Building Permit issued. Pending inspection.	Marysol	14	
21-2093-SIGN	Ben Mascari	879	Linden Ave	New sign	Submitted 2/26/2021. Approved 3/8/2021.	Marysol	14	
21-2092-SDU/CDP	J. Bradley Stein	1315	Casitas Pass Road	Validate (E) guest house as SDU & permit remodel of SDU & attached accessory	Submitted 2/26/2021. Complete 3/19/21. Prelim ARB approved 3/25/21. Director approved 6/1/21. BP issued 6/23/21. Under	Nick	14	

21-2090-DP/CDP	CHT, LLC	700	Linden Ave	Rehabilitate & Remodel (E) buildings; new 2nd floor addition	Submitted 2/17/21. Incomplete 3/19/21. Resubmitted 4/15/21. Prelim ARB approval 4/29/21. Resubmittal 5/21/21. Complete 6/11/21. PC approved 7/6/21. To ARB In-Progress Review 9/30/21. Hardware/Butler Buildings BP submitted 10/12/21. Butterfly Building BP submitted 11/23/21. Site Improvements BP submitted 12/14/21. Final ARB Review 6/30/22. Demolition permit issued and underway. Building Permit issued; under construction. Sign Program to ARB 5/25/23.	Nick	14	
21-2087-ARB	Paul & Michelle Sanchez	1481	Sterling Avenue	SFD remodel, 391sf of add'ns, new front porch, & full re-roof	Submitted 2/9/2021. Incomplete 3/5/2021. Resubmitted 3/26/2021. Complete 4/1/2021. Prelim & final at ARB 4/15/2021. Director approval 5/4/2021. BP#13369 issued 9/21/2021.	Syndi	14	
21-2086-ARB	Frank & Christine Isaac	5410	Cameo Road	SFD remodel, 70sf add'n., and new deck/trellis	Submitted 2/8/2021. Incomplete 3/5/2021. Resubmitted 6/29/2021. Complete 6/30/2021. To ARB for prelim/final review 7/29/2021. Director approved 10/20/2021. BP#13206 issued 2/8/2022.	Syndi	14	
21-2085-ARB/CDP	Forrest Carter	5251	Sixth Street	6' fence & gates	Submitted 2/4/21. Incomplete 2/25/21. Resubmitted 6/8/21. Complete 6/9/21. Prelim ARB approved 7/15/21. Director approved 8/26/21. BP submitted 9/22/21. BP issued 12/16/21. Construction underway; fence & landscape completed.	Nick	14	
21-2082-SIGN	Procore Technologies	6303	Carpinteria Ave	Reface existing monument sign and new illuminated wall sign	Submitted 01/13/2021. Approved 1/26/2021. BP issued 2/24/2021. Pending inspection.	Marysol	14	
21-2081-SIGN	Rincon Mountain Winery	4187	Carpinteria Ave	Wall sign, non-illuminated	Submitted 1/11/2021. Approved 1/26/2021. BP issued 2/3/2021. Under construction. Pending inspection.	Marysol	14	
20-2070-ARB/CDP	Manuel Martinez	1147	Vallecito Road	Remodel (e) SFD & construct 2nd story addition	Submitted 10/15/2020. Under review. Incomplete 11/13/2020. Resubmittal 11/24/2020. Incomplete 12/10/2020. Resubmittal 12/10/2020. Complete 12/11/2020. Prelim ARB on 2/11/2021, continued. Resubmittal 3/26/2021. Prelim at ARB 4/15/2021. Director approval 6/1/2021. Appeal filed 6/11/2021. Appeal to PC 8/2/2021. Appeal continued. Approved by PC on 9/7/2021. To ARB for final review 10/14/2021. BP#13346 issued 12/9/2021. Under construction.	Syndi	14	

20-2066-SIGN	Singing Springs	5455	Eighth Street	New monument sign	Submitted 8/17/2020. Director approval 9/15/2020. Building Permit issued 1/2021. Under construction, pending landscaping re-installation.	Marysol	14	
20-2061-ARB/CDP	Brandon and Julia Wheatley	1150	Vallecito Road	Master bedroom addition	Submitted 7/31/2020. Under review. Incomplete 8/25/2020. Incomplete 10/9/2020. Prelim/Final 10/29/2020 ARB. Incomplete 11/16/2020. Complete 01/14/2021. Director Approval 2/2/2021. BP issued. Under construction. Revision 1 issued.	Marysol	14	
20-2056-ARB	Rod Herman	1423	Camino Trillado	Exterior updates, new porch overhang, new curbs and 3' garden wall, new hardscape and landscaping.	Submitted 7/2/2020. Complete 7/30/2020. To ARB for prelim/final 9/17/2020. Director approved 9/23/2020. BP#13204 issued 4/26/2021. Under construction.	Syndi	14	
20-2051-SIGN	Coordinated Signs for LinkedIn	6410	Via Real	Campus-wide wayfinding signs	Submitted 3/30/2020. Incomplete 04/24/2020. Approved 5/19/2020. Pending BP Submittal. Minor revision to approved sign permit submitted. Revision approved. BP issued 9/29/2020. Under construction.	Marysol	14	
20-2043-DP/CDP	Strickland- Wahl	4854	Sandyland Road	Remodel & convert 2 apartments into 1 SFD	Submitted 03/06/20. Incomplete 4/3/20. Resubmitted 04/30/20. Complete 05/28/20. Preliminary ARB Approval 06/25/2020. PC Approved 9/8/20. CCC Appeal Period Ended 10/8/20. Final ARB approval 2/11/21. BP submitted 3/25/21. NTPO recorded 6/28/21. BP issued; under construction. Revised BP submitted for new rear fence & driveway gate. Final Inspections underway 4/26/23.	Nick	14	
20-2042-ARB	Scouras Family Trust	1493	Trenora Street	SFD remodel, 89.5 sf addition to 1st floor, 451 sf addition to 2nd floor	Submitted 3/5/2020. Incomplete 3/31/2020. Resubmitted 5/21/2020. Complete 6/18/2020. Prelim ARB on 7/16/2020. Resubmittal 8/27/2020. In-progress ARB on 10/29/2020. Approval letters sent 11/25/2020. Final ARB on 7/1/2021. BP#13339 issued 11/3/21. Under construction.	Syndi	14	
19-2029-DPR/CDP	Carpinteria Arts Center	855	Linden Avenue	Courtyard improvements: new hardscape, landscaping, a living wall, storage, utility sink, fencing, and trash enclosures	Submitted 12/20/2019. Complete 01/16/2020. Prelim ARB 2/27/2020. Approvals pending. BP submitted 10/23/2020. BP issued.	Marysol	14	

19-2023-LLA	Lockwood/Segall	5139 & 5157	Eighth Street	LLA, demo and rebuild garage.	Submitted 11/15/2019. Incomplete 12/13/19. Resubmitted 3/10/2020. 2nd Incomplete 4/2/2020. Resubmitted 4/13/2020. Complete 4/16/2020. Corrections sent to City Surveyor 4/27/2020. ARB on 5/28/2020. Approved by PC on 7/6/2020. City Surveyor corrections to applicant 7/13/2020. 4th review to City Surveyor 10/8/2020. Corrections to applicant 11/2/2020. LLA docs to City Surveyor for recording 4/5/2021. Applicant making corrections to add'l docs per Recorder's Office. LLA recorded 12/30/2021. BP#13089 issued 1/14/2022. Under construction.	Syndi	14	
19-2021-ARB	Marsha Ota	5273	Cambridge Lane	Remodel and addition of 460 sq. ft.	Submitted 11/7/2019. Complete 12/18/19. To CDD Director for action. Approved by CDD 2/24/2020. BP#12889 issued 8/3/2020. Under construction.	Syndi	14	
19-2016-DP/CDP	City of Carpinteria	5775	Carpinteria Avenue	New skate park and amenities	Submitted 10/22/2019. Complete 11/20/2019. Prelim review at ARB on 1/30/2020. Approved at PC on 6/1/2020. Final ARB on 3/31/2022. BP#13622 submitted 4/27/2022, in plan-check. Demo permit issued 5/17/2022. PW Grading permit issued 5/25/2022. BP #13622 issued 9/26/2022. Under construction.	Syndi	14	
19-2012-DPR	Mac Partners / Jeremy Rogers	6384	Via real	Building facade renovation, addition of new patio areas, new permeable area for future parking area.	Submitted 10/7/2109. Incomplete 11/6/19. Partial resubmittal 12/4/19; under review. Incomplete 12/16/2019. Resubmitted 01/14/2020. Incomplete 02/13/2020. Complete 06/03/2020. Prelim ARB 06/25/2020. In Progress ARB 10/29/2020. PC 12/7/2020. Final ARB 5/13/2021. Building Issued. Under construction. Exterior light demonstration under review ARB matters by staff 3/3/2022. Minor revision pending.	Marysol	14	
19-1996-DP/CDP/PM	Justin Klentner	1075	Cramer Road	Demolish (E) units; construct (N) 4-unit condo development	Submitted 8/28/19. Incomplete 9/26/19. Resubmitted 10/24/19. Complete 11/22/19. Prelim ARB approval 12/12/19. PC approved 2/3/20. ARB In-Progress 2/27/20. Final ARB Approval 3/12/20. Revised Final ARB Review 4/30/20. Building Permit submittal 4/14/20. Final Map recorded. BP ready to issue 8/31/20. Under construction. Condo Plan & CCRs recorded 7/23/21. Temp CoO issued 9/23/21.	Nick	14	

19-1965-DPR/CDP	Carpinteria Business Park	4185-4195	Carpinteria Ave	Exterior architectural façade improvements to five of the buildings within the Flood Hazard and Coastal Appeals Overlay.	Submitted 2/5/2018.Incomplete 3/19/2019. Resubmitted 3/28/2019. Incomplete 4/25/2019. Prelim ARB 06/13/2019. Complete 6/21/2019. Resubmittal 8/23/2019. Director Approval 9/26/2019. Final ARB 10/31/2019. Building Permit application submitted 12/17/2019. Building Permit issued. Under construction. Revision to lights approved by ARB 1/14/2021. Minor awning revision 8/2021. Monument sign revision 11/2021. Final Building Permit revisions submitted for review 04/2023.	Marysol	14	
18-1938-CDP	CA State Parks	205	Palm Avenue	Sewer replacement, Santa Rosa Campground	Submitted 9/25/2018. Complete 10/23/2018. NOE submitted. Approved 3/1/2019. Conditions of Approval and final plans received. Under construction.	Marysol	14	
18-1920-CUP/CDP	Caltrans		Citywide	Highway 101 HOV Lanes	Submitted 5/18/18. Incomplete letter 6/14/18. Applicant resubmittal 7/20/18. Complete 8/17/18. ARB Prelim/Final 10/11/2018. To PC 3/4/19, continued to 4/1/19. PC Approved 4/1/19. Under construction. Needs landscaping and minor flatwork.	Steve	14	
18-1909-ARB/CDP	Able, John	477	Concha Loma Dr	Addition & remodel to SFD, new pool, new ADU	Submitted 3/13/18. Incomplete 4/11/18. Resubmitted 6/11/18. Incomplete 7/11/18. Resubmitted 10/01/18. Incomplete 10/31/18. ARB conceptual review 11/15/18. Resubmitted 6/7/19; incomplete 7/5/19. Resubmitted 7/12/19. Incomplete 8/8/19. Resubmitted 9/12/19. Complete 10/10/19. Prelim ARB approval 11/21/19. Scheduled for In-progress ARB Review 4/30/20. CDD Director approval 6/23/20. Final ARB 6/25/20. CCC appeal period ended. BP issued 6/24/21; under construction.	Nick	14	
17-1850-CDP	CA Dept. of Parks and Recreation	205	Palm Avenue	State Beach Phase II ADA Improvements	Submitted 1/3/2017. Incomplete 1/31/2017. Resubmittal 5/22/2017. Complete 6/15/2107. Director Approval 9/13/2017. Pending resubmittal of minor modifications and signed Conditions of Approval. Received 9/6/2018. Time Extension approved 7/31/2019. Under construction.	Marysol	14	

16-1839-CDP	Thom Vernon	500	Maple Avenue	Install new windows & replacement roll-up doors	Submitted 8/12/16. Incomplete 9/8/16. Complete 9/14/16. To ARB 9/15/16, continued to 10/13/16. ARB approved 10/13/16. Director Approved 10/21/16. FLAN sent to CCC 11/1/16. BP application submitted 10/20/16. BP issued 2/2/17, under construction.	Nick	14	
15-1804-CDP	Hawkins	5567	Calle Arena	Construct (N) SFD w/ attached two-car garage	Submitted 12/29/15. Incomplete 1/28/16. Meeting w/ new agent 6/26/17. Concept ARB 8/17/17. Revised submittal 12/13/17. Incomplete 1/12/18. Concept ARB 2/15/18. Resubmitted 4/13/18. Incomplete 5/3/18. Resubmitted 5/9/18. Scheduled for Prelim ARB Review 5/31/18. Cont'd to Prelim 7/12/18. Cont'd to Prelim 7/26/18. ARB Prelim Approval 7/26/18. Complete 9/27/18. Revised ARB Prelim Approval 11/15/18. Director approval issued 12/18/18. Appeal filed 12/28/18. PC denied appeals 3/4/19. Appeal of PC decision filed 3/14/19. CC denied acceptance of appeal 4/22/19. FLAN sent to CCC 4/24/19. Appeal filed with CCC 5/9/19. CCC Appeal hearing 7/10/19, CCC found no substantial issue. City approvals stand. Final ARB approval 8/29/19. BP submitted 4/2/19. BP issued 12/19/19, under construction.	Nick	14	
15-1767-CDP	Wood	650	Concha Loma Drive	New Single Family Residence	Submitted 4/28/15. Incomplete 5/27/15. Resubmitted 7/13/15. Complete 8/10/15. CEQA Initial Study underway. ARB concept review 10/15/15. Draft MND public review period 7/15- 8/15/16. To ERC 8/4/16. Prelim ARB 8/11/16, continued with revisions. Revised plans submitted; Prelim ARB approved 9/14/17. PC Approved 8/5/19. FLAN sent to CCC 8/23/19. BP application submitted 12/24/19. Final ARB approved 5/28/20. In BP review. BP issued; under construction.	Nick	14	

08-1483-CDP	Salzgeber	447	Concha Loma Drive	Install water well and storage tank for agricultural purposes	Submitted 12/18/08. Incomplete 1/16/09. Resubmitted 3/20/09. Incomplete. Resubmitted 9/1/09. Director approved 5/7/10. Permit issued 10/19/10. Well constructed and sealed 11/10. Awaiting installation of pump and storage tank.	Nick	14	
04-1172-DP/CDP	Franssen	750	Palm Avenue	Construct one new SFD and create two condominiums	Revised plans submitted 9/15/06. Incomplete 10/9/06. Resubmitted 10/30/06. Prelim ARB 11/30/06. Complete 12/21/06. To PC 1/2/07. Revised Prelim ARB 1/25/07. PC approved 2/5/07. CC approved map clearance 12/10/07. PC approved one year TEX 2/4/08. Grading Permit issued 2/4/09. Final ARB for Unit 2 10/1/09. BP issued, under construction. CofO issued on rear unit.	Nick	14	
22-2181-SIGN	Wasanth Mohottige for Brass Bird	4835	Carpinteria Ave	New sign, existing location.	Submitted 9/6/2022. Approved 9/20/2022. Under construction. Final inspectin.	Marysol	15	
21-2134-SIGN	Carpinteria Business Park	4185, -88, -93	Carpinteria Avenue	Update existing signage of 4 tenants to meet the new sign program	Submitted 11/16/2021. Resubmittal under review for approval and building permit. Resubmittal pending. Resubmitted. Approved 4/19/2022. Building permit in plan check. Incomplete. Building Permit issued 6/23/2022. Extension request.	Marysol	15	
21-2120-DPR/ARB	Faydra Gage, Dawn Sherry Architects	4835	Carpinteria Ave	Exterior Alterations to existing parking lot/outdoor patio addition and minor interior remodel to existing commercial lease space.	Submitted 7/28/2021. Complete 8/27/2021. Prelim/Final ARB 9/30/2021. Director Approval 11/30/2021. Building Permit issued. Pending final inspection corrections and revision. Final sign off 2/21/2023.	Marysol	15	
21-2097-DP/CDP	Kimberly and Gregory Garcia	4921	Sandyland Road	Exterior remodel, new siding, windows, relandscaping, new fence	Submitted 3/9/2021. Incomplete 3/30/2021. Resubmitted 5/17/2021. Complete 6/15/2021. ARB 7/1/2021. Director Approval 8/24/2021. Building Permit Issued 9/24/2021. Revision approved by Matters by Staff 11/10/2021. Final sign-off corrections pending. Sign off completed.	Marysol	15	yes

20-2041-ARB/DP/CDP	Kyle & Andrea Zuvella	4756	Fifth Street	Remodel and 431 sf master suite addition	Submitted 3/4/2020. Incomplete 3/31/2020. Resubmittal 6/11/2020. To ARB 8/13/2020. Resubmittal 8/31/2020. To ARB for in-progress review 9/17/2020. To PC on 3/1/2021. Final ARB on 7/1/2021. BP#13276 issued 8/6/2021. Revision 1 submitted 4/5/2023. R1 issued 4/13/2023. Planning final 4/13/2023.	Syndi	15	
19-2008-ORD/LCPA	City of Carpinteria			Amendment(s) to the City's LCPA - (ADUs) to implement State requirements	LCPA Submittal to CCC Approved. ADU Prototypes under preparation. Concept elevations and floor plans reviewed by staff. RRM draft plan sets to be submitted Jan 2023. Second read 1/23/23. in effect 2/22/23	Steve/Rita	15	
19-1983-DP/TPM/CDP	Phari LLC	1112	Linden Avenue	Remodel and add 251 sf to an (E) SFD and detached garage with 2nd dwelling unit to create a project with four condominium units and a carport with associated parking and landscaping	Submitted 6/5/19; Incomplete 7/3/19. Resubmitted 7/3/19; complete 7/23/19. Prelim ARB was 7/11/19; no recommendation. PC Approved 8/5/19. No appeal. Final Map Recordation5.26/20. BP issued 7/23/2020. C of O issued.	Steve	15	
17-1868-DP/CDP	Carpinteria Sanitary District	5300	Sixth Street	Demolition of existing modular offices and the construction of a new 4,118 square foot one-story office building.	Submitted 4/12/2017. IDAG 4/20/2017. Incomplete 5/12/2017. Resubmitted 8/8/2017. Incomplete 9/7/2017. Resubmitted 10/10/2017. Complete 10/31/17. Prelim ARB 1/25/18. Continued Prelim ARB 03/15/2018. Planning Commission approved 06/04/2018. FLAN sent to CCC 6/14/18. Resubmittal 10/23/2019, under review. Pending PW determination. Final ARB 2/27/2020. BP issued 12/2021. Under Construction. Minor revision. Final sign off routing in progress. Temp C of O issued. 2/2023 C of O. Final C of O issued 03/29/2023.	Marysol	15	

09-1522-CUP/CDP/LCPA/ORD	Caltrans		Linden-Casitas Interchanges and Via Real Extension	Reconstruct overcrossings and extend Via Real across Carpinteria Creek	Submitted 2009. PC recommended approval 05/18/15. CC first reading and recommended approval of ORD and LCPA 06/22/15 and 07/27/15. Submitted to CCC 08/21/15. CCC hearing in October in Orange County. CC approved CUP/CDP 11/23/15. FLAN sent to CCC 12/1/15. No appeal. ARB Final 3/17/16. Construction underway 9/12/16.	Steve	15	
20-2074-CDP	AT&T / Eukon Group	323	Elm Avenue	new small wireless facility in City ROW.	Submitted 11/11/20. Incomplete 11/19/20. Resubmitted 5/24/21. Incomplete 6/3/21. Resubmitted 10/28/21. Complete 11/22/21. Director Approved 1/7/22. Expired.	Nick	X	
				Last updated	4/26/2023 15:05			

BUILDING PERMIT REPORT

04/01/2023 - 04/27/2023

Permit #	Application Submittal Date	Issued Date	Parcel #	Site Address	Owner Name	Project Description	Valuation	Status	Code Compliance Violation	Fire Permit Required
13968	4/25/2023	4/25/2023	001-252-007	5565 Cameo Road	ORTIZ, HUMBERTO	Remove existing comp shingles and woodshakes to install OSB plywood and Landmark shingles black color Class A roof 33 squares. Color similar (dark brown to black). Planning approved color changed.	19,000	Issued		
13967	4/25/2023	4/25/2023	003-301-026	4705 8th Street	8TH STREET CARPINTERIA, LLC	Remove tile to determine cause of leak. 1st leak improper shed/roof to wall flashing. 2nd leak when roofed. 400 sq. ft.	7,724	Pending Pickup	Yes	
13965	4/24/2023	4/25/2023	003-301-026	4705-A Eighth Street	8TH STREET CARPINTERIA, LLC	Interior: remove and replace 96 sf drywall in kitchen and bathroom. Standard bath remodel, shower walls installation and waterproof. Exterior: Remove and install existing window (for waterproof) flashing and stucco install 30 sf.	4,500	Pending Pickup	Yes	
13959	4/20/2023	4/26/2023	001-241-001	1305 Camino Trillado	MENDOZA, STEVEN & MARSHA FAMILY LIVING TRUST 1/20/03	Add am C/C unit to exterior of home. Model # 315AN02400W	7,000	Pending Pickup		
13954	4/17/2023	4/25/2023	001-252-002	5579 Came Road	MCFAUL, JAMES & ANITA REVOCABLE TRUST	Re-roof single family dwelling. Certainteed Presidential TL Single . 26 squares. Same Color	25,000	Issued		

13951	4/10/2023	4/10/2023	004-019-012	1350 Santa Monica Road	NANGLE, THOMAS G	Remove existing asphalt shingles and install new asphalt shingles same color. 17 squares	6,000	Issued		
13945	4/4/2023	4/4/2023	003-161-008	1233 Vallecito Road	WEIL SHAPIRO TRUST 11/17/14	Replace electrical service panel with new 200Amp main service panel; new panel will be relocated approx. 10' SE towards street on same wall; SCE #200404672.	4,000	Issued		
13940	4/3/2023	4/3/2023	003-890-021	4944 Sawyer Avenue	STEEN, JOHN E LIVING TRUST	Installation of retrofit windows and doors.	13,929	Issued		
13933	3/24/2023	4/12/2023	003-351-014	549 Arbol Verde Street	SALVADOR, JESSIE E LIVING TRUST 11/27/91	Replace 100 amp breaker box with 200 amp (same location). Rewire home. Replace all electrical outlets and add new lighting as described in Exhibit A. New exterior lighting.	25,500	Issued		
13927	3/31/2023	4/3/2023	004-026-045	1395 Linden Ave	CARRILLO JESUS/MARIA	200A new main service panel (existing 200A). No location change.	2,500	Issued		
13925	3/15/2023	4/12/2023	004-041-007 & -008	5030 Carpinteria Avenue	5030 Carpinteria Avenue, LLC	Partial interior demo to determine what structural work is need. Remove flooring, drop ceilings, drywall on walls. TI plans to follow.	10,500	Issued		
13912	3/6/2023	4/10/2023	003-153-014	4994 Carpinteria Avenue	SANTA CRUZ ISLAND FOUNDATION	Installation of a small chairlift to second floor in the building interior for employee use, including electrical work for the installation of the chairlift and to connect 1 each 20 amp circuit to chairlift.	47,000	Issued		
13910	3/8/2023	4/14/2023	003-243-005	4637 Ninth Street	Thomas-Goldstein Family Trust 11/15/2006	Remodel 118sf Master Bathroom	25,000	Issued		

13884	2/13/2023	4/19/2023	003-261-008	4945 Carpinteria Ave (City Parking Lot #1)	CITY OF CARPINTERIA	Site and Electrical infrastructure improvements fo the installation of (2) single port and (94) dual port EV charger (10 ports total). Located in City Parking Lot #1. A new address will be needed for the proposed electric meter. No Fees Applied to City Building Permit 13884	92,611	Issued		
13865	1/20/2023	4/12/2023	003-162-005	1159 Church Lane	GONZALES, MARK	Demo (e) drainage culvert, fill, and construct (n) retaining wall with 6' tall wooden fence above; ~90 linear feet.	8,500	Pending Pickup		
13808	10/13/2022	4/19/2023	004-006-047	1539 Meadow Circle	THOMAS, MATTHEW C & BETH ANNE REVOCABLE LIVING TRUST 12/17/2002	Add one bedroom to an existing house.	105,000	Pending Pickup		Yes
13783	9/20/2022	4/26/2023	003-104-002	1266 Cramer Circle	Lynn Trieu and Trung Dang	Installation of 3.28 kw of flush roof mounted solar PV with 8 panels, 1 inverter, 1 battery and 1 subpanel. ***REVISION #1 - Module swap to Ja Solar 395 - decrease system size to 3.16kw.	11,863	Pending Pickup		
13774	9/22/2022	4/13/2023	003-830-007	4975 Sandyland Road #107	SCHROEDER, KATHLEEN ANN DALEY	Unit 107: Remodel bathroom, replace cast iron sewer pipe & shower valve, install new exhaust vent to vent to outside patio area, lighting to code, hardwire smoke detectors. New/relocated outlets and recessed lighting throughout unit, new TREX stairs and deck on patio.	30,000	Issued		

13276	4/5/2023	4/13/2023	003-303-014	4756 5th Street	Kyle Zuvela	Remodel and a 500 sq. ft. addition. Adding additional bedroom and bathroom. Remove stucco, replace with new lap siding. Remove chain link fence and arbor and replace with white picket fence. No change to parking or drainage. Revision #1: Add full bathroom to Bdrm #3; relocate oven; add 2nd kitchen sink; revised windows; composite slate roof; white-washed wood siding on exterior.	485,000	Issued		
12204	11/3/2017	4/10/2023	001-262-003	5398 El Carro Lane	VANWINGERDEN FAMILY TRUST 3/21/89	Replace a damaged drywall in garage. Replace and repair all electrical outlets. Re-tile shower stalls, replace sewer line that has been infiltrated by City tree roots. *Reinstatement 4/10/2023*	8,700	Final	Yes	

Total Records: 20

4/27/2023